Monocolor Flexible SMD LED PRODUCT SPECIFICATION

Model No.：FYSH-3528UXC-60-12V-WW8

Features:

The application of soft & flexible PCB makes the strip possible to be bent into any shape as per users' needs. The viewing angle as wide as 120°and adjustable length by cutting off or connecting every three LED's enable it to be more suitable for the applications of signs, advertisings and backlights.

Applications:

- Channel Letters
- Lighting source for shop windows
- Indoor Decoration Lighting
- Advertising Signs
- Replacement for Neon

CUSTOMER APPROVED SIGNATURES	APPROVED BY	CHECKED BY	PREPARED BY

NINGBO FORYARD OPTOELECTRONICS CO.,LTD.
Add:NO.115 Qixin Road Ningbo Zhejiang China **Zip:**315051
Tel: 0086-574-87933652 87927870 87922206
Fax: 0086-574-87927917
E-mail: Sales@foryard.com (General)
Http://www.foryard.com

Model No.: FYSH-3528UXC-60-12V-WW8

■Photo

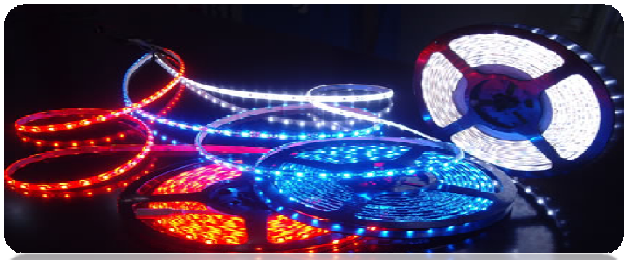

■ Drawing (1 meter)

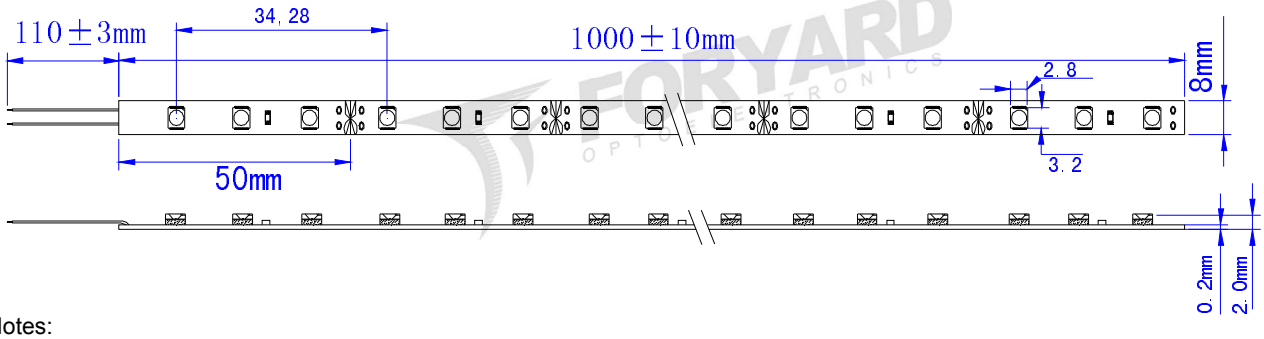

Notes:

1. All dimensions are millimeters.
2. Tolerance is ±0.2mm unless otherwise specified.
3. Specifications are subject to change without notice.
4. Dimension: L1000*W8*H2mm.without prior notice.
5. Can be cut or connected every three LEDs.

■Circuit Diagram(a single group)

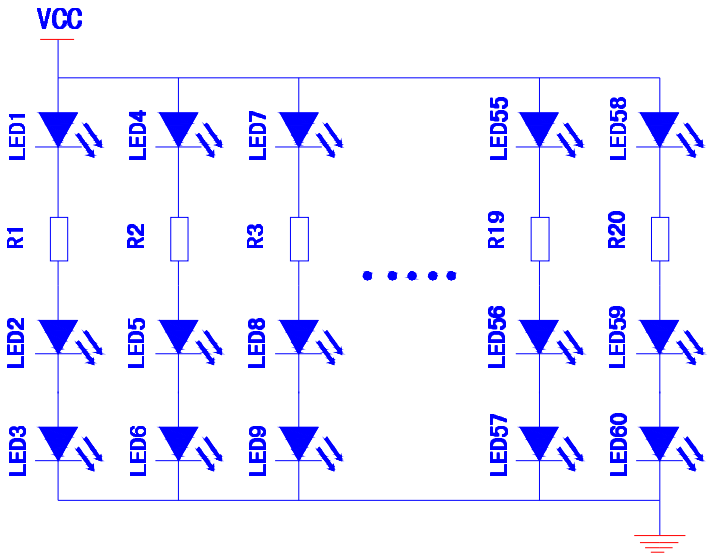

Model No.: FYSH-3528UXC-60-12V-WW8

■Rating Electrical/Optical Characteristics(1 meter)

Item	Red	Yellow	Blue	Green	White
Operation Voltage(V	DC12	DC12	DC12	DC12	DC12
Power Dissipation(W	4.8	4.8	4.8	4.8	4.8
Input Current(mA)	400	400	400	400	400
Wavelength(nm)	625-635	590-594	465-475	515-525	CCT:5000K-6500K
Single LED Luminous Intensity(MCD)	600	600	350	1200	2000
Luminous Flux(lm)	120	120	60	240	360
Angle(°)	120				
Operation Temperature(℃)	-20~60				
single LED Operating	20				
LED Quantity(pcs)	60				
Dimension:(mm)	L1000*W8*H2mm				
Life Time(hrs)	50000				
net weight:(g)	40				
Approval	CE(NO:E8N 08 03 57489 002)				

■ Rating Electrical/Optical Characteristics(5 meter)

Item	Red	Yellow	Blue	Green	White
Power Dissipation	24W	24W	24W	24W	24W
Total Length	5m±0.5mm	5m±0.5mm	5m±0.5mm	5m±0.5mm	5m±0.5mm.
Input Current(mA)	2000	2000	2000	2000	2000
Weight	200g	200g	200g	200g	200g

Model No.: FYSH-3528UXC-60-12V-WW8

■Package(5 meters)

The backsides of all products will stick '3M' branded double-sided sticker with 8mm width.

Reel

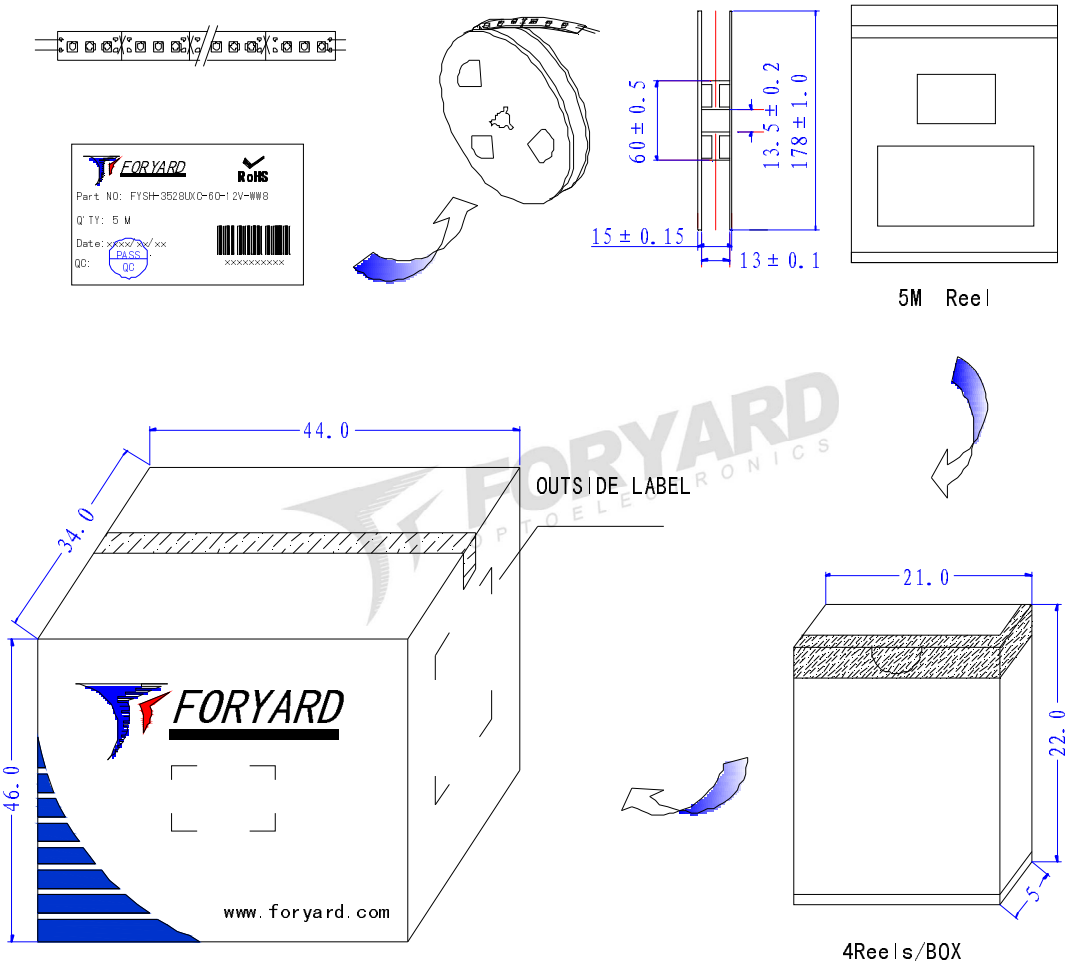

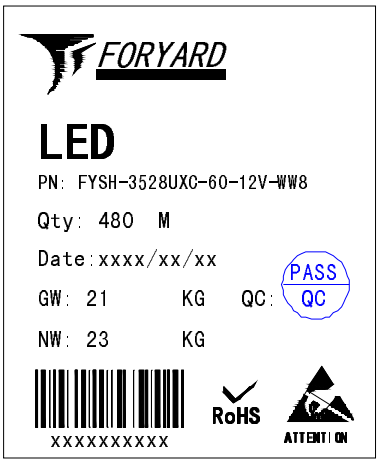

OUTSIDE LABEL

Model No.：FYSH-3528UXC-60-12V-WW8

■How to use:

1. Please use this product with 12V DC.
2. Please complete the ESD-prevention before using.
3. The flexible LED strips should be neither bent into right-angles nor folded.
4. For this product, every three LEDs on the same strip can be cut off and use separately (namely, every 100mm works as a group). Please refer to the 'Outline' for the details.
5. The calculating way that how many this product a power supply can upload is: the current(A) that the power supply can offer/the current distributed to each single group*total group of this product
6. The strip quantity of each sting that directly connected to the power supply should not exceed 30 PCS; otherwise, the brightness of the strip at the end of the string will be dimmed because of the voltage reduction. Although a loop circuit can avoid reduction happening, one string should not connect too many strips.
7. The wire with gray line is anode, while the red、green、blue 、yellow、white is cathode, If polarities connected in a wrong way, the strip will not be lit, but will not be damaged either. What only needs to do is changing the polarity connection.
8. When installing the strips in the plastic letters or characters, please try to use 3 or 4 branch wires and when doing the connection try to make the strips in a letter or character or box form a loop circuit or several loop circuits by using red and black wire to connect the strips at the end of the strokes together according to their polarities.
9. This product is water-proof.
10. When installing the strip, the double-sided adhesive tape or carpenter's glue is required to make the clip slot of the strip firmly stuck together. When using the double-sided adhesive tape, proper glass glue must be spread to avoid the strip falling off after long-time exposed in the sunlight.
11. The strip quantity of each sting that directly connected to the power supply should not exceed 30pcs; otherwise, the brightness of the strip at the end of the string will be dimmed because of the voltage reduction. Although a loop circuit can avoid reduction happening, one string should not connect too many strips.
12. No push, squeeze or press on the components of the strip for fear damaging the components to affect the lighting effects.

Model No.：FYSH-3528UXC-60-12V-WW8

■ 修改记录

日期	修改内容	工程师	版本

FORYARD OPTOELECTRONICS