T491 Industrial Grade MnO_2 Series

Electronic Components KEMET CHARGED.

Overview

The KEMET T491 Series, designed specifically for today's highly automated surface mount processes and equipment, is the leading choice for surface mount designs. The T491 combines KEMET's proven solid tantalum technology, acclaimed and respected throughout the world, with the latest in materials, processes and automation, resulting in unsurpassed total performance and value.

This product meets or exceeds the requirements of EIA Standard 535BAAC. The physical outline and dimensions of this series conform to this global standard. Five low profile case sizes are available in the T491 Series. The R/2012–12, S/3216–12 and T/3528–12 case sizes have a maximum height of 1.2 mm. The U/6032–15 size has a maximum height of 1.5 mm, and the V/7343–20 has a maximum height of 2.0 mm.

The T491 standard terminations are 100% matte tin and provide excellent wetting characteristics and compatibility with today's surface mount solder systems. Tin/lead (Sn/Pb) terminations are available upon request for any part number. Gold-plated terminations are also available for use with conductive epoxy attachment processes. The symmetrical terminations offer total compliancy to provide the thermal and mechanical stress relief required with today's technology. Lead frame attachments to the tantalum pellet are made via a microprocessor-controlled welding operation, and a high temperature silver epoxy adhesive system.

Standard packaging of these devices is tape and reel in accordance with EIA 481–1. This system provides perfect compatibility with all tape-fed placement units.

Benefits

- Meets or exceeds EIA Standard 535BAAC
- Taped and reeled per EIA 481–1
- Symmetrical, compliant terminations
- Optical gold-plated terminations
- Laser-marked case
- 100% surge current test on C, D, E, U, V, X sizes
- Halogen free epoxy
- Capacitance 0.1 μF to 1,000 μF
- Tolerance ±10%, ±20%
- Voltage 2.5 – 50 VDC
- Extended range values
- Low profile case sizes
- RoHS Compliant and lead-free terminations (See www.kemet.com for transition information)
- Operating temperature: -55ºC to +125ºC

Applications

Typical applications include decoupling and filtering in industrial and automotive end applications such as DC/DC converters, portable electronics, telecommunications, and control units.

Environmental Compliance

RoHS Compliant (6/6) according to Directive 2002/95/EC when ordered with 100% Sn solder.

RoHS Compliant

© KEMET Electronics Corporation • P.O. Box 5928 • Greenville, SC 29606 (864) 963-6300 • www.kemet.com

SPICE

For a detailed analysis of specific part numbers, please visit www.kemet.com for a free download of KEMET's SPICE software. The KEMET SPICE program is freeware intended to aid design engineers in analyzing the performance of these capacitors over frequency, temperature, ripple, and DC bias conditions.

Ordering Information

T	491	X	157	K	020	A	T	
Capacitor Class	Series	Case Size	Capacitance Code (pF)	Capacitance Tolerance	Voltage	Failure Rate/ Design	Lead Material	Packaging (C-Spec)
T = Tantalum	Industrial	A, B, C, D, E, S, T, U, V, X	First two digits represent significant figures. Third digit specifies number of zeros.	K = ±10% M = ±20%	2R5 = 2.5 V 003 = 3 V 004 = 4 V 006 = 6.3 V 010 = 10 V 016 = 16 V 020 = 20 V 025 = 25 V 035 = 35 V 050 = 50 V	A = N/A	T = 100% Matte Tin (Sn) Plated* H = Standard Solder Coated (SnPb 5% Pb minimum) G = Gold Plated (A, B, C, D, X only) N = Non-Magnetic 100% Tin (Sn) M = Non-Magnetic (SnPb)	Blank = 7" Reel 7280 = 13" Reel

Performance Characteristics

Item	Performance Characteristics
Operating Temperature	-55°C to 125°C
Rated Capacitance Range	0.1 – 1,000 µF @ 120 Hz/25°C
Capacitance Tolerance	K Tolerance (10%), M Tolerance (20%)
Rated Voltage Range	2.5 – 50 V
DF (120 Hz)	Refer to Part Number Electrical Specification Table
ESR (100 kHz)	Refer to Part Number Electrical Specification Table
Leakage Current	≤ 0.01 CV (µA) at rated voltage after 5 minutes

Qualification

Test	Condition		Characteristics			
Endurance	85°C @ rated voltage, 2,000 hours 125°C @ 2/3 rated voltage, 2,000 hours		Δ C/C	Within ±10% of initial value		
			DF	Within initial limits		
			DCL	Within 1.25 x initial limit		
			ESR	Within initial limits		
Storage Life	125°C @ 0 volts, 2,000 hours		Δ C/C	Within ±10% of initial value		
			DF	Within initial limits		
			DCL	Within 1.25 x initial limit		
			ESR	Within initial limits		
Thermal Shock	MIL–STD–202, Method 107, Condition B, mounted, -55C° to 125° C, 1,000 cycles		Δ C/C	Within ±5% of initial value		
			DF	Within initial limits		
			DCL	Within 1.25 x initial limit		
			ESR	Within initial limits		
Temperature Stability	Extreme temperature exposure at a succession of continuous steps at +25ºC, -55ºC, +25ºC, +85ºC, +125ºC, +25ºC.		+25°C	-55°C	+85°C	+125°C
		Δ C/C	IL*	±10%	±10%	±20%
		DF	IL	IL	1.5 x IL	1.5 x IL
		DCL	IL	n/a	10 x IL	12 x IL
Surge Voltage	25°C and 85°C, 1.32 x rated voltage 1,000 cycles (125°C, 1.2 x rated voltage).		Δ C/C	Within ±5% of initial value		
			DF	Within initial limits		
			DCL	Within initial limits		
			ESR	Within initial limits		
Mechanical Shock/Vibration	MIL–STD–202, Method 213, Condition I, 100 G peak MIL–STD–202, Method 204, Condition D, 10 Hz to 2,000 Hz, 20 G peak		Δ C/C	Within ±10% of initial value		
			DF	Within initial limits		
			DCL	Within initial limits		

**IL = Initial limit*

Electrical Characteristics

ESR vs. Frequency

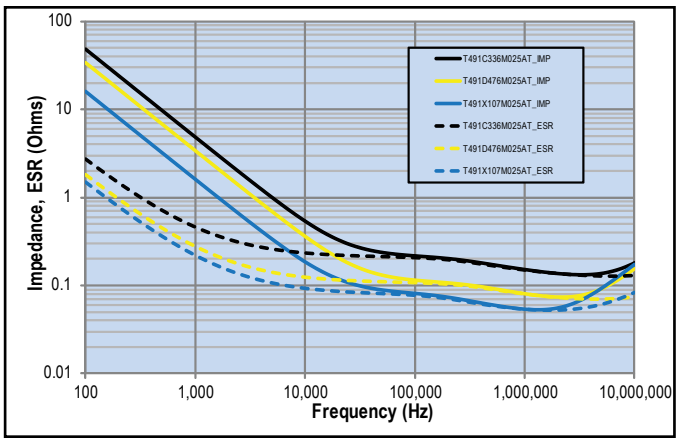

Capacitance vs. Frequency

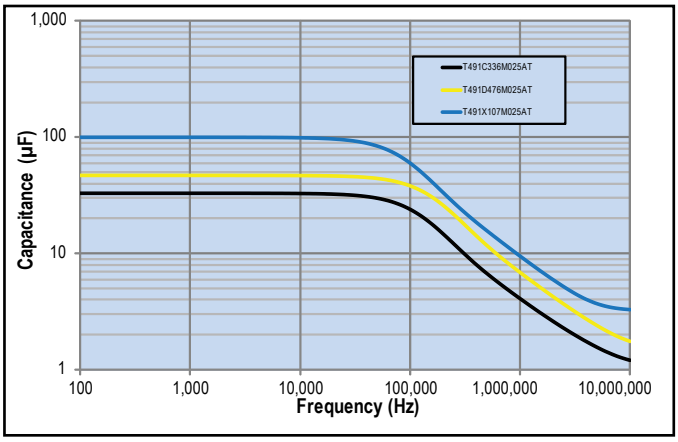

Dimensions – Millimeters (Inches)

Metric will govern

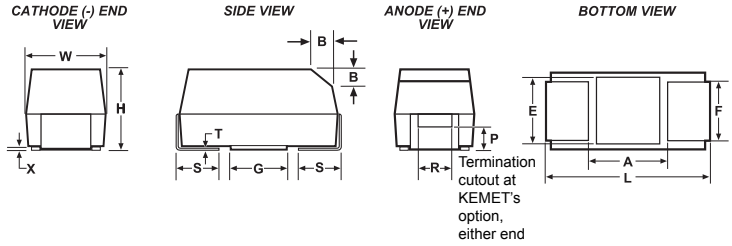

Case Size		Component												
KEMET	EIA	L*	W*	H*	F* ±0.1 ±(.004)	S* ±0.3 ±(.012)	B* ±0.15 (Ref) ±.006	X (Ref)	P (Ref)	R (Ref)	T (Ref)	A (Min)	G (Ref)	E (Ref)
A	3216–18	3.2 ±0.2 (0.126 ±0.008)	1.6 ±0.2 (0.063 ±0.008)	1.6 ±0.2 (0.063 ±0.008)	1.2 (.047)	0.8 (.031)	0.4 (.016)	0.10 ±0.10 (0.004 ±0.004)	0.4 (.016)	0.4 (.016)	0.13 (.005)	0.8 (.31)	1.1 (.043)	1.3 (.051)
B	3528–21	3.5 ±0.2 (0.138 ±0.008)	2.8 ±0.2 (0.110 ±0.008)	1.9 ±0.2 (0.075 ±0.008)	2.2 (.087)	0.8 (.031)	0.4 (.016)	0.10 ±0.10 (0.004 ±0.004)	0.5 (.020)	1.0 (.039)	0.13 (.005)	1.1 (0.043)	1.8 (.071)	2.2 (.087)
C	6032–28	6.0 ±0.3 (0.236 ±0.03)	3.2 ±0.3 (0.126 ±0.012)	2.5 ±0.3 (0.098 ±0.012)	2.2 (.087)	1.3 (.051)	0.5 (.020)	0.10 ±0.10 (0.004 ±0.004)	0.9 (.035)	1.0 (.039)	0.13 (.005)	2.5(.098)	2.8 (.110)	2.4 (.094)
D	7343–31	7.3 ±0.3 (0.287 ±0.012)	4.3 ±0.3 (0.169 ±0.012)	2.8 ±0.3 (0.110 ±0.012)	2.4 (.094)	1.3 (.051)	0.5 (.020)	0.10 ±0.10 (0.004 ±0.004)	0.9 (.035)	1.0 (.039)	0.13 (.005)	3.8 (.150)	3.5 (.138)	3.5 (.138)
X	7343–43	7.3 ±0.3 (0.287 ±0.012)	4.3 ±0.3 (0.169 ±0.012)	4.0 ±0.3 (0.157 ±0.012)	2.4 (.094)	1.3 (.051)	0.5 (.020)	0.10 ±0.10 (0.004 ±0.004)	1.7 (.067)	1.0 (.039)	0.13 (.005)	3.8 (.150)	3.5 (.138)	3.5 (.138)
E	7360-38	7.3 ±0.3 (0.287 ±0.012)	6.0± 0.3 (0.236 ±0.012)	3.6 ± 0.2 (0.142 ±0.008)	4.1 (.161)	1.3 (.051)	0.5 (.020)	0.10 ± 0.10 (.004 ± .004)	n/a	n/a	0.13 (.005)	3.8 (.150)	3.5 (.138)	3.5 (.138)
S	3216–12	3.2 ±0.2 (0.126 ±0.008)	1.6 ±0.2 (0.063 ±0.008)	1.2 (.047)	1.2 (.047)	0.8 (.031)	n/a	0.05 (.002)	n/a	n/a	0.13 (.005)	0.8 (.031)	1.1 (.043)	1.3 (.051)
T	3528–12	3.5 ±0.2 (0.138 ±0.008)	2.8 ±0.2 (0.110 ±0.008)	1.2 (.047)	2.2 (.087)	0.8 (.031)	n/a	0.05 (.002)	n/a	n/a	0.13 (.005)	1.1 (.043)	1.8 (.071)	2.2 (.087)
U	6032–15	6.0 ±0.3 (0.236 ±0.012)	3.2 ±0.2 (0.110 ±0.008)	1.5 (.059)	2.2 (.087)	1.3 (.051)	n/a	0.05 (.002)	n/a	n/a	0.13 (.005)	2.5(.098)	2.8 (.110)	2.4 (.094)
V	7343–20	7.3 ±0.3 (0.287 ±0.012)	4.3 ±0.3 (0.169 ±0.012)	2.0 (.079)	2.4 (.094)	1.3 (.051)	n/a	0.05 (.002)	n/a	n/a	0.13 (.005)	3.8 (.150)	3.5 (.138)	3.5 (.138)

Notes: (Ref) – Dimensions provided for reference only. No dimensions are provided for B, P or R because low profile cases do not have a bevel or a notch.
** MIL–PRF–55365/8 specified dimensions*

Table 1 – Ratings & Part Number Reference

Rated Voltage	Rated Cap	Case Code/ Case Size	KEMET Part Number	DC Leakage	DF	ESR	Maximum Allowable Ripple Current			Moisture Sensitivity
VDC	µF	KEMET/EIA	(See below for part options)	µA @ +20°C Maximum/ 5 Minutes	% @ +20°C 120 Hz Maximum	Ω @ +20°C 100 kHz Maximum	(mA) 100 kHz 25°C	(mA) 100 kHz +85°C	(mA) 100 kHz +125°C	Reflow Temperature ≤ 260 °C
2.5	100	T/3528-12	T491T107(1)2R5A(2)	2.5	24.0	3.9	134	121	54	1
2.5	220	D/7343-31	T491D227(1)2R5A(2)	5.5	8.0	0.3	707	636	283	1
3	33	A/3216-18	T491A336(1)003A(2)	1.0	6.0	4.0	137	123	55	1
4	3.3	A/3216-18	T491A335(1)004A(2)	0.5	6.0	8.0	97	87	39	1
4	4.7	A/3216-18	T491A475(1)004A(2)	0.5	6.0	8.0	97	87	39	1
4	6.8	A/3216-18	T491A685(1)004A(2)	0.5	6.0	6.0	112	101	45	1
4	6.8	S/3216-12	T491S685(1)004A(2)	0.5	6.0	15.0	63	57	25	1
4	10	B/3528-21	T491B106(1)004A(2)	0.5	6.0	3.5	156	140	62	1
4	10	A/3216-18	T491A106(1)004A(2)	0.5	6.0	6.0	112	101	45	1
4	10	S/3216-12	T491S106(1)004A(2)	0.5	6.0	15.0	63	57	25	1
4	15	B/3528-21	T491B156(1)004A(2)	0.6	6.0	3.5	156	140	62	1
4	15	A/3216-18	T491A156(1)004A(2)	0.6	6.0	4.0	137	123	55	1
4	15	T/3528-12	T491T156(1)004A(2)	0.6	6.0	5.0	118	106	47	1
4	15	S/3216-12	T491S156(1)004A(2)	0.6	10.0	15.0	63	57	25	1
4	22	C/6032-28	T491C226(1)004A(2)	0.9	6.0	1.8	247	222	99	1
4	22	B/3528-21	T491B226(1)004A(2)	0.9	6.0	3.5	156	140	62	1
4	22	A/3216-18	T491A226(1)004A(2)	0.9	6.0	4.0	137	123	55	1
4	22	T/3528-12	T491T226(1)004A(2)	0.9	6.0	5.0	118	106	47	1
4	22	S/3216-12	T491S226(1)004A(2)	0.9	10.0	10.0	77	69	31	1
4	33	C/6032-28	T491C336(1)004A(2)	1.3	6.0	1.8	247	222	99	1
4	33	U/6032-15	T491U336(1)004A(2)	1.3	6.0	1.8	224	202	90	1
4	33	B/3528-21	T491B336(1)004A(2)	1.3	6.0	3.5	156	140	62	1
4	33	A/3216-18	T491A336(1)004A(2)	1.3	6.0	4.0	137	123	55	1
4	33	T/3528-12	T491T336(1)004A(2)	1.3	8.0	5.0	118	106	47	1
4	47	C/6032-28	T491C476(1)004A(2)	1.9	6.0	1.8	247	222	99	1
4	47	U/6032-15	T491U476(1)004A(2)	1.9	6.0	1.8	224	202	90	1
4	47	B/3528-21	T491B476(1)004A(2)	1.9	6.0	3.0	168	151	67	1
4	47	A/3216-18	T491A476(M)004A(2)	1.9	12.0	2.5	173	156	69	1
4	47	T/3528-12	T491T476(M)004A(2)	1.9	12.0	6.0	108	97	43	1
4	68	D/7343-31	T491D686(1)004A(2)	2.7	6.0	0.8	433	390	173	1
4	68	C/6032-28	T491C686(1)004A(2)	2.7	6.0	1.6	262	236	105	1
4	68	U/6032-15	T491U686(1)004A(2)	2.7	6.0	1.8	224	202	90	1
4	68	B/3528-21	T491B686(1)004A(2)	2.7	6.0	3.5	156	140	62	1
4	68	A/3216-18	T491A686(1)004A(2)	2.7	30.0	4.0	137	123	55	1
4	100	D/7343-31	T491D107(1)004A(2)	4.0	8.0	0.8	433	390	173	1
4	100	C/6032-28	T491C107(1)004A(2)	4.0	8.0	1.2	303	273	121	1
4	100	U/6032-15	T491U107(1)004A(2)	4.0	10.0	1.8	224	202	90	1
4	100	B/3528-21	T491B107(M)004A(2)	4.0	8.0	0.9	307	276	123	1
4	100	A/3216-18	T491A107(M)004A(2)	4.0	30.0	4.0	137	123	55	1
4	100	T/3528-12	T491T107(M)004A(2)	4.0	30.0	5.0	118	106	47	1
4	150	D/7343-31	T491D157(1)004A(2)	6.0	8.0	0.8	433	390	173	1
4	150	U/6032-15	T491U157(1)004AT	6.0	8.0	1.3	263	237	105	1
4	150	V/7343-20	T491V157(1)004A(2)	6.0	8.0	0.7	423	381	169	1
4	150	C/6032-28	T491C157(1)004A(2)	6.0	8.0	1.2	303	273	121	1
4	150	B/3528-21	T491B157(M)004A(2)	6.0	12.0	2.0	206	185	82	1
4	220	V/7343-20	T491V227(1)004A(2)	8.8	8.0	0.7	423	381	169	1
4	220	B/3528-21	T491B227(M)004A(2)	8.8	18.0	0.5	412	371	165	1
4	220	C/6032-28	T491C227(1)004AT	8.8	15.0	1.2	303	273	121	1
4	220	D/7343-31	T491D227(1)004AT	8.8	8.0	0.8	433	390	173	1
4	220	W/7343-15	T491W227(1)004AT	8.8	8.0	0.8	474	427	190	1
VDC	µF	KEMET/EIA	(See below for part options)	µA @ +20°C Maximum/ 5 Minutes	% @ +20°C 120 Hz Maximum	Ω @ +20°C 100 kHz Maximum	(mA) 100 kHz 25°C	(mA) 100 kHz +85°C	(mA) 100 kHz +125°C	Reflow Temperature ≤ 260 °C
Rated Voltage	Rated Cap	Case Code/ Case Size	KEMET Part Number	DC Leakage	DF	ESR	Maximum Allowable Ripple Current			Moisture Sensitivity

(1) To complete KEMET part number, insert M for ±20% or K for ±10%. Designates capacitance tolerance.
(2) To complete KEMET part number, insert T = 100% Matte Tin (Sn) Plated, G = Gold Plated, H = Standard Solder coated (SnPb 5% Pb minimum), N = Non-Magnetic 100% Tin (Sn), M = Non-Magnetic (SnPb). Designates Termination Finish.
Refer to Ordering Information for additional detail.
Higher voltage ratings and tighter tolerance product including ESR may be substituted within the same size at KEMET's option. Voltage substitution will be marked with the higher voltage rating. Substitutions can include better than series.

Roll Over for Order Info.

Table 1 – Ratings & Part Number Reference cont'd

Rated Voltage	Rated Cap	Case Code/ Case Size	KEMET Part Number	DC Leakage	DF	ESR	Maximum Allowable Ripple Current			Moisture Sensitivity
VDC	µF	KEMET/EIA	(See below for part options)	µA @ +20ºC Maximum/ 5 Minutes	% @ +20ºC 120 Hz Maximum	Ω @ +20ºC 100 kHz Maximum	(mA) 100 kHz 25ºC	(mA) 100 kHz +85ºC	(mA) 100 kHz +125ºC	Reflow Temperature ≤ 260 ºC
4	330	D/7343-31	T491D337(1)004A(2)	13.2	8.0	0.7	463	417	185	1
4	330	V/7343-20	T491V337(1)004A(2)	13.2	12.0	0.7	423	381	169	1
4	330	C/6032-28	T491C337(1)004A(2)	13.2	10.0	0.9	350	315	140	1
4	330	X/7343-43	T491X337(1)004AT	13.2	8.0	0.8	454	409	182	1
4	470	X/7343-43	T491X477(1)004A(2)	18.8	8.0	0.5	574	517	230	1
4	470	D/7343-31	T491D477(1)004A(2)	18.8	8.0	0.8	433	390	173	1
4	680	X/7343-43	T491X687(1)004A(2)	27.2	12.0	0.5	574	517	230	1
4	680	D/7343-31	T491D687(1)004A(2)	27.2	12.0	0.5	548	493	219	1
4	1000	X/7343-43	T491X108(1)004A(2)	40.0	12.0	0.5	574	517	230	1
4	1000	E/7360-38	T491E108(M)004A(2)	40.0	15.0	0.2	1000	900	400	1
6.3	2.2	A/3216-18	T491A225(1)006A(2)	0.5	6.0	8.0	97	87	39	1
6.3	3.3	A/3216-18	T491A335(1)006A(2)	0.5	6.0	8.0	97	87	39	1
6.3	4.7	A/3216-18	T491A475(1)006A(2)	0.5	6.0	6.0	112	101	45	1
6.3	4.7	S/3216-12	T491S475(1)006A(2)	0.5	6.0	15.0	63	57	25	1
6.3	6.8	B/3528-21	T491B685(1)006A(2)	0.5	6.0	3.5	156	140	62	1
6.3	6.8	A/3216-18	T491A685(1)006A(2)	0.5	6.0	6.0	112	101	45	1
6.3	6.8	S/3216-12	T491S685(1)006A(2)	0.5	6.0	15.0	63	57	25	1
6.3	10	B/3528-21	T491B106(1)006A(2)	0.6	6.0	3.5	156	140	62	1
6.3	10	A/3216-18	T491A106(1)006A(2)	0.6	6.0	4.0	137	123	55	1
6.3	10	T/3528-12	T491T106(1)006A(2)	0.6	6.0	5.0	118	106	47	1
6.3	10	S/3216-12	T491S106(1)006A(2)	0.6	10.0	15.0	63	57	25	1
6.3	15	C/6032-28	T491C156(1)006A(2)	0.9	6.0	1.8	247	222	99	1
6.3	15	B/3528-21	T491B156(1)006A(2)	0.9	6.0	3.5	156	140	62	1
6.3	15	A/3216-18	T491A156(1)006A(2)	0.9	6.0	3.5	146	131	58	1
6.3	15	T/3528-12	T491T156(1)006A(2)	0.9	6.0	5.0	118	106	47	1
6.3	15	S/3216-12	T491S156(1)006A(2)	0.9	15.0	10.0	77	69	31	1
6.3	22	C/6032-28	T491C226(1)006A(2)	1.4	6.0	1.8	247	222	99	1
6.3	22	U/6032-15	T491U226(1)006A(2)	1.4	6.0	1.8	224	202	90	1
6.3	22	B/3528-21	T491B226(1)006A(2)	1.4	6.0	3.5	156	140	62	1
6.3	22	A/3216-18	T491A226(1)006A(2)	1.4	6.0	4.0	137	123	55	1
6.3	22	T/3528-12	T491T226(1)006A(2)	1.4	8.0	5.0	118	106	47	1
6.3	33	C/6032-28	T491C336(1)006A(2)	2.1	6.0	1.8	247	222	99	1
6.3	33	U/6032-15	T491U336(1)006A(2)	2.1	6.0	1.8	224	202	90	1
6.3	33	B/3528-21	T491B336(1)006A(2)	2.1	6.0	3.0	168	151	67	1
6.3	33	A/3216-18	T491A336(1)006A(2)	2.1	12.0	2.5	173	156	69	1
6.3	33	T/3528-12	T491T336(1)006A(2)	2.1	12.0	6.0	108	97	43	1
6.3	47	D/7343-31	T491D476(1)006A(2)	3.0	6.0	0.8	433	390	173	1
6.3	47	C/6032-28	T491C476(1)006A(2)	3.0	6.0	1.6	262	236	105	1
6.3	47	U/6032-15	T491U476(1)006A(2)	3.0	6.0	1.8	224	202	90	1
6.3	47	V/7343-20	T491V476(1)006AT	3.0	6.0	0.7	423	381	169	1
6.3	47	B/3528-21	T491B476(1)006A(2)	3.0	6.0	2.0	206	185	82	1
6.3	47	A/3216-18	T491A476(M)006A(2)	3.0	12.0	3.5	146	131	58	1
6.3	47	T/3528-12	T491T476(1)006A(2)	3.0	24.0	4.4	126	113	50	1
6.3	68	D/7343-31	T491D686(1)006A(2)	4.3	6.0	0.8	433	390	173	1
6.3	68	C/6032-28	T491C686(1)006A(2)	4.3	6.0	1.2	303	273	121	1
6.3	68	U/6032-15	T491U686(1)006A(2)	4.3	10.0	1.8	224	202	90	1
6.3	68	V/7343-20	T491V686(1)006AT	4.3	6.0	0.7	423	381	169	1
6.3	68	B/3528-21	T491B686(1)006A(2)	4.3	8.0	0.9	307	276	123	1
6.3	68	A/3216-18	T491A686(1)006A(2)	4.3	30.0	4.0	137	123	55	1
6.3	100	D/7343-31	T491D107(1)006A(2)	6.3	8.0	0.8	433	390	173	1
VDC	µF	KEMET/EIA	(See below for part options)	µA @ +20ºC Maximum/ 5 Minutes	% @ +20ºC 120 Hz Maximum	Ω @ +20ºC 100 kHz Maximum	(mA) 100 kHz 25ºC	(mA) 100 kHz +85ºC	(mA) 100 kHz +125ºC	Reflow Temperature ≤ 260 ºC
Rated Voltage	Rated Cap	Case Code/ Case Size	KEMET Part Number	DC Leakage	DF	ESR	Maximum Allowable Ripple Current			Moisture Sensitivity

(1) To complete KEMET part number, insert M for ±20% or K for ±10%. Designates capacitance tolerance.
(2) To complete KEMET part number, insert T = 100% Matte Tin (Sn) Plated, G = Gold Plated, H = Standard Solder coated (SnPb 5% Pb minimum), N = Non-Magnetic 100% Tin (Sn), M = Non-Magnetic (SnPb). Designates Termination Finish.
Refer to Ordering Information for additional detail.
Higher voltage ratings and tighter tolerance product including ESR may be substituted within the same size at KEMET's option. Voltage substitution will be marked with the higher voltage rating. Substitutions can include better than series.

Roll Over for Order Info.

Table 1 – Ratings & Part Number Reference cont'd

Rated Voltage	Rated Cap	Case Code/ Case Size	KEMET Part Number	DC Leakage	DF	ESR	Maximum Allowable Ripple Current			Moisture Sensitivity
VDC	µF	KEMET/EIA	(See below for part options)	µA @ +20ºC Maximum/ 5 Minutes	% @ +20ºC 120 Hz Maximum	Ω @ +20ºC 100 kHz Maximum	(mA) 100 kHz 25ºC	(mA) 100 kHz +85ºC	(mA) 100 kHz +125ºC	Reflow Temperature ≤ 260 ºC
6.3	100	V/7343-20	T491V107(1)006A(2)	6.3	8.0	0.7	423	381	169	1
6.3	100	C/6032-28	T491C107(1)006A(2)	6.3	8.0	0.9	350	315	140	1
6.3	100	U/6032-15	T491U107(1)006A(2)	6.3	10.0	1.8	224	202	90	1
6.3	100	B/3528-21	T491B107(1)006A(2)	6.3	15.0	3.0	168	151	67	1
6.3	150	B/3528-21	T491B157M006A(2)	9.5	15.0	3.0	168	151	67	1
6.3	150	D/7343-31	T491D157(1)006A(2)	9.5	8.0	0.7	463	417	185	1
6.3	150	C/6032-28	T491C157(1)006A(2)	9.5	8.0	1.2	303	273	121	1
6.3	150	V/7343-20	T491V157(1)006A(2)	9.5	8.0	0.7	423	381	169	1
6.3	150	U/6032-15	T491U157(1)006AT	9.5	8.0	0.6	387	348	155	1
6.3	150	W/7343-15	T491W157(1)006AT	9.5	8.0	0.8	474	427	190	1
6.3	220	X/7343-43	T491X227(1)006A(2)	13.9	8.0	0.7	486	437	194	1
6.3	220	D/7343-31	T491D227(1)006A(2)	13.9	8.0	0.7	463	417	185	1
6.3	220	C/6032-28	T491C227(M)006A(2)	13.9	10.0	1.2	303	273	121	1
6.3	220	V/7343-20	T491V227(1)006A(2)	13.9	12.0	0.7	423	381	169	1
6.3	220	W/7343-15	T491W227(1)006AT	13.9	8.0	0.8	474	427	190	1
6.3	330	V/7343-20	T491V337(1)006AT	20.8	8.0	0.7	423	381	169	1
6.3	330	X/7343-43	T491X337(1)006A(2)	20.8	8.0	0.4	642	578	257	1
6.3	330	D/7343-31	T491D337(1)006A(2)	20.8	8.0	0.4	612	551	245	1
6.3	330	E/7360-38	T491E337(1)006A(2)	20.8	8.0	0.5	632	569	253	1
6.3	470	X/7343-43	T491X477(1)006A(2)	29.6	10.0	0.4	642	578	257	1
6.3	470	D/7343-31	T491D477(M)006A(2)	29.6	12.0	0.4	612	551	245	1
6.3	470	E/7360-38	T491E477(1)006A(2)	29.6	10.0	0.4	707	636	283	1
6.3	680	X/7343-43	T491X687(1)006A(2)	42.8	15.0	0.6	524	472	210	1
6.3	680	E/7360-38	T491E687(M)006A(2)	42.8	12.0	0.5	632	569	253	1
6.3	1000	X/7343-43	T491X108(1)006AT	63.0	15.0	0.6	524	472	210	1
10	1.5	A/3216-18	T491A155(1)010A(2)	0.5	6.0	8.0	97	87	39	1
10	2.2	B/3528-21	T491B225(1)010A(2)	0.5	6.0	3.5	156	140	62	1
10	2.2	A/3216-18	T491A225(1)010A(2)	0.5	6.0	8.0	97	87	39	1
10	3.3	A/3216-18	T491A335(1)010A(2)	0.5	6.0	6.0	112	101	45	1
10	3.3	S/3216-12	T491S335(1)010A(2)	0.5	6.0	15.0	63	57	25	1
10	4.7	B/3528-21	T491B475(1)010A(2)	0.5	6.0	3.5	156	140	62	1
10	4.7	A/3216-18	T491A475(1)010A(2)	0.5	6.0	5.0	122	110	49	1
10	4.7	S/3216-12	T491S475(1)010A(2)	0.5	6.0	15.0	63	57	25	1
10	6.8	B/3528-21	T491B685(1)010A(2)	0.7	6.0	3.5	156	140	62	1
10	6.8	A/3216-18	T491A685(1)010A(2)	0.7	6.0	4.0	137	123	55	1
10	6.8	T/3528-12	T491T685(1)010A(2)	0.7	6.0	5.0	118	106	47	1
10	6.8	S/3216-12	T491S685(1)010A(2)	0.7	10.0	15.0	63	57	25	1
10	10	C/6032-28	T491C106(1)010A(2)	1.0	6.0	1.8	247	222	99	1
10	10	B/3528-21	T491B106(1)010A(2)	1.0	6.0	3.5	156	140	62	1
10	10	A/3216-18	T491A106(1)010A(2)	1.0	6.0	4.0	137	123	55	1
10	10	T/3528-12	T491T106(1)010A(2)	1.0	6.0	5.0	118	106	47	1
10	10	S/3216-12	T491S106(1)010A(2)	1.0	10.0	15.0	63	57	25	1
10	15	C/6032-28	T491C156(1)010A(2)	1.5	6.0	1.8	247	222	99	1
10	15	U/6032-15	T491U156(1)010A(2)	1.5	6.0	1.8	224	202	90	1
10	15	B/3528-21	T491B156(1)010A(2)	1.5	6.0	2.8	174	157	70	1
10	15	A/3216-18	T491A156(1)010A(2)	1.5	8.0	6.0	112	101	45	1
10	15	T/3528-12	T491T156(1)010A(2)	1.5	8.0	5.0	118	106	47	1
10	22	C/6032-28	T491C226(1)010A(2)	2.2	6.0	1.8	247	222	99	1
10	22	U/6032-15	T491U226(1)010A(2)	2.2	6.0	1.8	224	202	90	1
10	22	B/3528-21	T491B226(1)010A(2)	2.2	6.0	2.4	188	169	75	1
VDC	µF	KEMET/EIA	(See below for part options)	µA @ +20ºC Maximum/ 5 Minutes	% @ +20ºC 120 Hz Maximum	Ω @ +20ºC 100 kHz Maximum	(mA) 100 kHz 25ºC	(mA) 100 kHz +85ºC	(mA) 100 kHz +125ºC	Reflow Temperature ≤ 260 ºC
Rated Voltage	Rated Cap	Case Code/ Case Size	KEMET Part Number	DC Leakage	DF	ESR	Maximum Allowable Ripple Current			Moisture Sensitivity

(1) To complete KEMET part number, insert M for ±20% or K for ±10%. Designates capacitance tolerance.
(2) To complete KEMET part number, insert T = 100% Matte Tin (Sn) Plated, G = Gold Plated, H = Standard Solder coated (SnPb 5% Pb minimum), N = Non-Magnetic 100% Tin (Sn), M = Non-Magnetic (SnPb). Designates Termination Finish.
Refer to Ordering Information for additional detail.
Higher voltage ratings and tighter tolerance product including ESR may be substituted within the same size at KEMET's option. Voltage substitution will be marked with the higher voltage rating. Substitutions can include better than series.

Roll Over for Order Info.

Table 1 – Ratings & Part Number Reference cont'd

Rated Voltage	Rated Cap	Case Code/ Case Size	KEMET Part Number	DC Leakage	DF	ESR	Maximum Allowable Ripple Current			Moisture Sensitivity
VDC	µF	KEMET/EIA	(See below for part options)	µA @ +20°C Maximum/ 5 Minutes	% @ +20°C 120 Hz Maximum	Ω @ +20°C 100 kHz Maximum	(mA) 100 kHz 25°C	(mA) 100 kHz +85°C	(mA) 100 kHz +125°C	Reflow Temperature ≤ 260 °C
10	22	A/3216-18	T491A226(1)010A(2)	2.2	10.0	6.0	112	101	45	1
10	22	T/3528-12	T491T226(1)010A(2)	2.2	12.0	8.0	94	85	38	1
10	33	D/7343-31	T491D336(1)010A(2)	3.3	6.0	0.8	433	390	173	1
10	33	V/7343-20	T491V336(1)010A(2)	3.3	6.0	0.7	423	381	169	1
10	33	C/6032-28	T491C336(1)010A(2)	3.3	6.0	1.6	262	236	105	1
10	33	U/6032-15	T491U336(1)010A(2)	3.3	6.0	1.8	224	202	90	1
10	33	B/3528-21	T491B336(1)010A(2)	3.3	6.0	1.8	217	195	87	1
10	33	T/3528-12	T491T336(1)010A(2)	3.3	24.0	5.0	118	106	47	1
10	33	A/3216-18	T491A336(1)010A(2)	3.3	15.0	6.0	112	101	45	1
10	47	D/7343-31	T491D476(1)010A(2)	4.7	6.0	0.8	433	390	173	1
10	47	V/7343-20	T491V476(1)010A(2)	4.7	6.0	0.7	423	381	169	1
10	47	C/6032-28	T491C476(1)010A(2)	4.7	6.0	1.2	303	273	121	1
10	47	U/6032-15	T491U476(1)010A(2)	4.7	10.0	2.2	202	182	81	1
10	47	B/3528-21	T491B476(1)010A(2)	4.7	8.0	1.0	292	263	117	1
10	68	D/7343-31	T491D686(1)010A(2)	6.8	6.0	0.8	433	390	173	1
10	68	V/7343-20	T491V686(1)010A(2)	6.8	6.0	0.7	423	381	169	1
10	68	C/6032-28	T491C686(1)010A(2)	6.8	6.0	1.2	303	273	121	1
10	68	W/7343-15	T491W686(1)010AT	6.8	6.0	1.2	387	348	155	1
10	68	U/6032-15	T491U686(1)010A(2)	6.8	10.0	1.8	224	202	90	1
10	68	B/3528-21	T491B686(M)010A(2)	6.8	10.0	3.0	168	151	67	1
10	100	B/3528-21	T491B107(M)010A(2)	10.0	15.0	3.0	168	151	67	1
10	100	D/7343-31	T491D107(1)010A(2)	10.0	8.0	0.7	463	417	185	1
10	100	U/6032-15	T491U107(1)010AT	10.0	8.0	0.7	359	323	144	1
10	100	W/7343-15	T491W107(1)010AT	10.0	8.0	0.8	474	427	190	1
10	100	C/6032-28	T491C107(1)010A(2)	10.0	8.0	1.2	303	273	121	1
10	100	V/7343-20	T491V107(1)010A(2)	10.0	8.0	0.7	423	381	169	1
10	150	X/7343-43	T491X157(1)010A(2)	15.0	8.0	0.7	486	437	194	1
10	150	D/7343-31	T491D157(1)010A(2)	15.0	8.0	0.7	463	417	185	1
10	150	C/6032-28	T491C157(1)010A(2)	15.0	10.0	0.9	350	315	140	1
10	150	V/7343-20	T491V157(1)010A(2)	15.0	8.0	0.7	423	381	169	1
10	220	X/7343-43	T491X227(1)010A(2)	22.0	8.0	0.5	574	517	230	1
10	220	D/7343-31	T491D227(1)010A(2)	22.0	8.0	0.5	548	493	219	1
10	330	D/7343-31	T491D337(M)010A(2)	33.0	10.0	0.5	548	493	219	1
10	330	X/7343-43	T491X337(1)010A(2)	33.0	10.0	0.5	574	517	230	1
10	330	E/7360-38	T491E337(1)010A(2)	33.0	10.0	0.5	632	569	253	1
10	470	X/7343-43	T491X477(1)010A(2)	47	10	0.2	908	817.2	363.2	1
10	470	E/7360-38	T491E477(M)010A(2)	47.0	12.0	0.5	632	569	253	1
16	1	A/3216-18	T491A105(1)016A(2)	0.5	4.0	10.0	87	78	35	1
16	1.5	A/3216-18	T491A155(1)016A(2)	0.5	6.0	8.0	97	87	39	1
16	2.2	A/3216-18	T491A225(1)016A(2)	0.5	6.0	6.0	112	101	45	1
16	2.2	S/3216-12	T491S225(1)016A(2)	0.5	6.0	15.0	63	57	25	1
16	3.3	B/3528-21	T491B335(1)016A(2)	0.5	6.0	3.5	156	140	62	1
16	3.3	A/3216-18	T491A335(1)016A(2)	0.5	6.0	5.0	122	110	49	1
16	4.7	C/6032-28	T491C475(1)016A(2)	0.8	6.0	2.4	214	193	86	1
16	4.7	B/3528-21	T491B475(1)016A(2)	0.8	6.0	3.5	156	140	62	1
16	4.7	A/3216-18	T491A475(1)016A(2)	0.8	6.0	4.0	137	123	55	1
16	4.7	T/3528-12	T491T475(1)016A(2)	0.8	6.0	5.0	118	106	47	1
16	6.8	C/6032-28	T491C685(1)016A(2)	1.1	6.0	1.9	241	217	96	1
16	6.8	B/3528-21	T491B685(1)016A(2)	1.1	6.0	2.5	184	166	74	1
16	6.8	A/3216-18	T491A685(1)016A(2)	1.1	6.0	3.5	146	131	58	1
VDC	µF	KEMET/EIA	(See below for part options)	µA @ +20°C Maximum/ 5 Minutes	% @ +20°C 120 Hz Maximum	Ω @ +20°C 100 kHz Maximum	(mA) 100 kHz 25°C	(mA) 100 kHz +85°C	(mA) 100 kHz +125°C	Reflow Temperature ≤ 260 °C
Rated Voltage	Rated Cap	Case Code/ Case Size	KEMET Part Number	DC Leakage	DF	ESR	Maximum Allowable Ripple Current			Moisture Sensitivity

(1) To complete KEMET part number, insert M for ±20% or K for ±10%. Designates capacitance tolerance.
(2) To complete KEMET part number, insert T = 100% Matte Tin (Sn) Plated, G = Gold Plated, H = Standard Solder coated (SnPb 5% Pb minimum), N = Non-Magnetic 100% Tin (Sn), M = Non-Magnetic (SnPb). Designates Termination Finish.
Refer to Ordering Information for additional detail.
Higher voltage ratings and tighter tolerance product including ESR may be substituted within the same size at KEMET's option. Voltage substitution will be marked with the higher voltage rating. Substitutions can include better than series.

Roll Over for Order Info.

Table 1 – Ratings & Part Number Reference cont'd

Rated Voltage	Rated Cap	Case Code/ Case Size	KEMET Part Number	DC Leakage	DF	ESR	Maximum Allowable Ripple Current			Moisture Sensitivity
VDC	µF	KEMET/EIA	(See below for part options)	µA @ +20°C Maximum/ 5 Minutes	% @ +20°C 120 Hz Maximum	Ω @ +20°C 100 kHz Maximum	(mA) 100 kHz 25°C	(mA) 100 kHz +85°C	(mA) 100 kHz +125°C	Reflow Temperature ≤ 260 °C
16	10	C/6032-28	T491C106(1)016A(2)	1.6	6.0	1.8	247	222	99	1
16	10	U/6032-15	T491U106(1)016A(2)	1.6	6.0	1.8	224	202	90	1
16	10	B/3528-21	T491B106(1)016A(2)	1.6	6.0	2.8	174	157	70	1
16	10	A/3216-18	T491A106(1)016A(2)	1.6	8.0	7.0	104	94	42	1
16	10	T/3528-12	T491T106(1)016A(2)	1.6	8.0	8.0	94	85	38	1
16	15	C/6032-28	T491C156(1)016A(2)	2.4	6.0	1.8	247	222	99	1
16	15	U/6032-15	T491U156(1)016A(2)	2.4	6.0	1.8	224	202	90	1
16	15	B/3528-21	T491B156(1)016A(2)	2.4	6.0	2.5	184	166	74	1
16	15	A/3216-18	T491A156(1)016A(2)	2.4	8.0	3.5	146	131	58	1
16	22	D/7343-31	T491D226(1)016A(2)	3.5	6.0	0.8	433	390	173	1
16	22	C/6032-28	T491C226(1)016A(2)	3.5	6.0	1.6	262	236	105	1
16	22	U/6032-15	T491U226(1)016A(2)	3.5	10.0	3.0	173	156	69	1
16	22	B/3528-21	T491B226(1)016A(2)	3.5	6.0	2.2	197	177	79	1
16	33	D/7343-31	T491D336(1)016A(2)	5.3	6.0	0.8	433	390	173	1
16	33	C/6032-28	T491C336(1)016A(2)	5.3	6.0	1.2	303	273	121	1
16	33	U/6032-15	T491U336(1)016A(2)	5.3	12.0	3.0	173	156	69	1
16	33	B/3528-21	T491B336(1)016A(2)	5.3	8.0	2.1	201	181	80	1
16	47	D/7343-31	T491D476(1)016A(2)	7.5	6.0	0.8	433	390	173	1
16	47	V/7343-20	T491V476(1)016A(2)	7.5	6.0	0.7	423	381	169	1
16	47	C/6032-28	T491C476(1)016A(2)	7.5	6.0	1.2	303	273	121	1
16	68	V/7343-20	T491V686(1)016A(2)	10.9	6.0	0.7	423	381	169	1
16	68	C/6032-28	T491C686(1)016AT	10.9	6.0	1.2	303	273	121	1
16	68	W/7343-15	T491W686(1)016AT	10.9	6.0	0.8	474	427	190	1
16	68	D/7343-31	T491D686(1)016A(2)	10.9	6.0	0.7	463	417	185	1
16	68	C/6032-28	T491C686(1)016A(2)	10.9	12.0	1.2	303	273	121	1
16	100	X/7343-43	T491X107(1)016A(2)	16.0	8.0	0.7	486	437	194	1
16	100	C/6032-28	T491C107(1)016AT	16.0	10.0	1.0	332	299	133	1
16	100	V/7343-20	T491V107(1)016A(2)	16.0	12.0	0.7	423	381	169	1
16	100	D/7343-31	T491D107(1)016A(2)	16.0	8.0	0.7	463	417	185	1
16	150	X/7343-43	T491X157(1)016A(2)	24.0	8.0	0.5	574	517	230	1
16	150	D/7343-31	T491D157(1)016A(2)	24.0	12.0	0.7	463	417	185	1
16	220	X/7343-43	T491X227(1)016A(2)	35.2	10.0	0.5	574	517	230	1
16	220	E/7360-38	T491E227(1)016A(2)	35.2	7.2	0.9	471	424	188	1
20	0.68	A/3216-18	T491A684(1)020A(2)	0.5	4.0	12.0	79	71	32	1
20	1	A/3216-18	T491A105(1)020A(2)	0.5	4.0	9.0	91	82	36	1
20	1	S/3216-12	T491S105(1)020A(2)	0.5	6.0	18.0	58	52	23	1
20	1.5	A/3216-18	T491A155(1)020A(2)	0.5	6.0	6.5	107	96	43	1
20	1.5	S/3216-12	T491S155(1)020A(2)	0.5	6.0	15.0	63	57	25	1
20	2.2	B/3528-21	T491B225(1)020A(2)	0.5	6.0	3.5	156	140	62	1
20	2.2	A/3216-18	T491A225(1)020A(2)	0.5	6.0	7.0	104	94	42	1
20	3.3	B/3528-21	T491B335(1)020A(2)	0.7	6.0	3.0	168	151	67	1
20	3.3	A/3216-18	T491A335(1)020A(2)	0.7	6.0	4.5	129	116	52	1
20	3.3	T/3528-12	T491T335(1)020A(2)	0.7	6.0	5.0	118	106	47	1
20	4.7	C/6032-28	T491C475(1)020A(2)	0.9	6.0	2.4	214	193	86	1
20	4.7	B/3528-21	T491B475(1)020A(2)	0.9	6.0	3.0	168	151	67	1
20	4.7	A/3216-18	T491A475(1)020A(2)	0.9	6.0	4.0	137	123	55	1
20	6.8	C/6032-28	T491C685(1)020A(2)	1.4	6.0	1.9	241	217	96	1
20	6.8	U/6032-15	T491U685(1)020A(2)	1.4	6.0	1.9	218	196	87	1
20	6.8	B/3528-21	T491B685(1)020A(2)	1.4	6.0	2.5	184	166	74	1
20	6.8	A/3216-18	T491A685(M)020A(2)	1.4	8.0	6.0	112	101	45	1
VDC	µF	KEMET/EIA	(See below for part options)	µA @ +20°C Maximum/ 5 Minutes	% @ +20°C 120 Hz Maximum	Ω @ +20°C 100 kHz Maximum	(mA) 100 kHz 25°C	(mA) 100 kHz +85°C	(mA) 100 kHz +125°C	Reflow Temperature ≤ 260 °C
Rated Voltage	Rated Cap	Case Code/ Case Size	KEMET Part Number	DC Leakage	DF	ESR	Maximum Allowable Ripple Current			Moisture Sensitivity

(1) To complete KEMET part number, insert M for ±20% or K for ±10%. Designates capacitance tolerance.
(2) To complete KEMET part number, insert T = 100% Matte Tin (Sn) Plated, G = Gold Plated, H = Standard Solder coated (SnPb 5% Pb minimum), N = Non-Magnetic 100% Tin (Sn), M = Non-Magnetic (SnPb). Designates Termination Finish.
Refer to Ordering Information for additional detail.
Higher voltage ratings and tighter tolerance product including ESR may be substituted within the same size at KEMET's option. Voltage substitution will be marked with the higher voltage rating. Substitutions can include better than series.

Roll Over for Order Info.

Table 1 – Ratings & Part Number Reference cont'd

Rated Voltage	Rated Cap	Case Code/ Case Size	KEMET Part Number	DC Leakage	DF	ESR	Maximum Allowable Ripple Current			Moisture Sensitivity
VDC	µF	KEMET/EIA	(See below for part options)	µA @ +20°C Maximum/ 5 Minutes	% @ +20°C 120 Hz Maximum	Ω @ +20°C 100 kHz Maximum	(mA) 100 kHz 25°C	(mA) 100 kHz +85°C	(mA) 100 kHz +125°C	Reflow Temperature ≤ 260 °C
20	10	C/6032-28	T491C106(1)020A(2)	2.0	6.0	1.8	247	222	99	1
20	10	U/6032-15	T491U106(1)020A(2)	2.0	6.0	1.8	224	202	90	1
20	10	B/3528-21	T491B106(1)020A(2)	2.0	6.0	2.1	201	181	80	1
20	10	A/3216-18	T491A106(M)020A(2)	2.0	10.0	5.0	122	110	49	1
20	15	D/7343-31	T491D156(1)020A(2)	3.0	6.0	1.0	387	348	155	1
20	15	B/3528-21	T491B156(1)020AT	3.0	6.0	2.5	184	166	74	1
20	15	C/6032-28	T491C156(1)020A(2)	3.0	6.0	1.7	254	229	102	1
20	22	D/7343-31	T491D226(1)020A(2)	4.4	6.0	0.8	433	390	173	1
20	22	V/7343-20	T491V226(1)020A(2)	4.4	6.0	0.7	423	381	169	1
20	22	C/6032-28	T491C226(1)020A(2)	4.4	6.0	1.2	303	273	121	1
20	22	B/3528-21	T491B226(1)020A(2)	4.4	8.0	4.0	146	131	58	1
20	33	D/7343-31	T491D336(1)020A(2)	6.6	6.0	0.8	433	390	173	1
20	33	C/6032-28	T491C336(M)020A(2)	6.6	6.0	1.2	303	273	121	1
20	33	V/7343-20	T491V336(1)020A(2)	6.6	8.0	0.7	423	381	169	1
20	33	B/3528-21	T491B336(M)020A(2)	6.6	10.0	4.0	146	131	58	1
20	47	C/6032-28	T491C476(M)020A(2)	9.4	10.0	0.9	350	315	140	1
20	47	X/7343-43	T491X476(1)020AT	9.4	6.0	0.8	454	409	182	1
20	47	D/7343-31	T491D476(1)020A(2)	9.4	6.0	0.7	463	417	185	1
20	68	X/7343-43	T491X686(1)020A(2)	13.6	6.0	0.7	486	437	194	1
20	68	D/7343-31	T491D686(1)020A(2)	13.6	8.0	0.7	463	417	185	1
20	100	X/7343-43	T491X107(1)020A(2)	20.0	8.0	0.5	574	517	230	1
20	100	D/7343-31	T491D107(1)020AT	20.0	8.0	0.9	408	367	163	1
20	100	E/7360-38	T491E107(1)020A(2)	20.0	8.0	0.5	632	569	253	1
20	150	X/7343-43	T491X157(1)020A(2)	30.0	10.0	0.5	574	517	230	1
25	0.33	A/3216-18	T491A334(1)025A(2)	0.5	4.0	15.0	71	64	28	1
25	0.47	A/3216-18	T491A474(1)025A(2)	0.5	4.0	14.0	73	66	29	1
25	0.68	A/3216-18	T491A684(1)025A(2)	0.5	4.0	10.0	87	78	35	1
25	1	B/3528-21	T491B105(1)025A(2)	0.5	4.0	5.0	130	117	52	1
25	1	A/3216-18	T491A105(1)025A(2)	0.5	4.0	8.0	97	87	39	1
25	1	S/3216-12	T491S105(1)025A(2)	0.5	6.0	18.0	58	52	23	1
25	1.5	B/3528-21	T491B155(1)025A(2)	0.5	6.0	5.0	130	117	52	1
25	1.5	A/3216-18	T491A155(1)025A(2)	0.5	6.0	7.5	100	90	40	1
25	2.2	C/6032-28	T491C225(1)025A(2)	0.6	6.0	3.5	177	159	71	1
25	2.2	A/3216-18	T491A225(1)025A(2)	0.6	6.0	7.0	104	94	42	1
25	2.2	B/3528-21	T491B225(1)025A(2)	0.6	6.0	4.5	137	123	55	1
25	3.3	C/6032-28	T491C335(1)025A(2)	0.8	6.0	2.5	210	189	84	1
25	3.3	A/3216-18	T491A335(1)025A(2)	0.8	6.0	7.0	104	94	42	1
25	3.3	B/3528-21	T491B335(1)025A(2)	0.8	6.0	3.5	156	140	62	1
25	4.7	C/6032-28	T491C475(1)025A(2)	1.2	6.0	2.4	214	193	86	1
25	4.7	B/3528-21	T491B475(1)025A(2)	1.2	6.0	1.5	238	214	95	1
25	4.7	A/3216-18	T491A475(M)025A(2)	1.2	8.0	6.0	112	101	45	1
25	6.8	C/6032-28	T491C685(1)025A(2)	1.7	6.0	1.9	241	217	96	1
25	6.8	B/3528-21	T491B685(1)025A(2)	1.7	8.0	2.8	174	157	70	1
25	10	D/7343-31	T491D106(1)025A(2)	2.5	6.0	1.0	387	348	155	1
25	10	C/6032-28	T491C106(1)025A(2)	2.5	6.0	1.5	271	244	108	1
25	10	B/3528-21	T491B106(1)025A(2)	2.5	8.0	3.0	168	151	67	1
25	15	D/7343-31	T491D156(1)025A(2)	3.8	6.0	1.0	387	348	155	1
25	15	V/7343-20	T491V156(1)025AT	3.8	6.0	1.0	354	319	142	1
25	15	C/6032-28	T491C156(1)025A(2)	3.8	6.0	1.5	271	244	108	1
25	15	B/3528-21	T491B156(1)025A(2)	3.8	8.0	4.0	146	131	58	1
VDC	µF	KEMET/EIA	(See below for part options)	µA @ +20°C Maximum/ 5 Minutes	% @ +20°C 120 Hz Maximum	Ω @ +20°C 100 kHz Maximum	(mA) 100 kHz 25°C	(mA) 100 kHz +85°C	(mA) 100 kHz +125°C	Reflow Temperature ≤ 260 °C
Rated Voltage	Rated Cap	Case Code/ Case Size	KEMET Part Number	DC Leakage	DF	ESR	Maximum Allowable Ripple Current			Moisture Sensitivity

(1) To complete KEMET part number, insert M for ±20% or K for ±10%. Designates capacitance tolerance.
(2) To complete KEMET part number, insert T = 100% Matte Tin (Sn) Plated, G = Gold Plated, H = Standard Solder coated (SnPb 5% Pb minimum), N = Non-Magnetic 100% Tin (Sn), M = Non-Magnetic (SnPb). Designates Termination Finish.
Refer to Ordering Information for additional detail.
Higher voltage ratings and tighter tolerance product including ESR may be substituted within the same size at KEMET's option. Voltage substitution will be marked with the higher voltage rating. Substitutions can include better than series.

Roll Over for Order Info.

Table 1 – Ratings & Part Number Reference cont'd

Rated Voltage	Rated Cap	Case Code/ Case Size	KEMET Part Number	DC Leakage	DF	ESR	Maximum Allowable Ripple Current			Moisture Sensitivity
VDC	µF	KEMET/EIA	(See below for part options)	µA @ +20°C Maximum/ 5 Minutes	% @ +20°C 120 Hz Maximum	Ω @ +20°C 100 kHz Maximum	(mA) 100 kHz 25°C	(mA) 100 kHz +85°C	(mA) 100 kHz +125°C	Reflow Temperature ≤ 260 °C
25	22	D/7343-31	T491D226(1)025A(2)	5.5	6.0	0.8	433	390	173	1
25	22	C/6032-28	T491C226(1)025A(2)	5.5	6.0	1.4	280	252	112	1
25	22	V/7343-20	T491V226(1)025A(2)	5.5	6.0	0.7	423	381	169	1
25	33	X/7343-43	T491X336(1)025A(2)	8.3	6.0	0.7	486	437	194	1
25	33	D/7343-31	T491D336(1)025A(2)	8.3	6.0	0.7	463	417	185	1
25	33	C/6032-28	T491C336(1)025A(2)	8.3	10.0	1.2	303	273	121	1
25	47	X/7343-43	T491X476(1)025A(2)	11.8	6.0	0.7	486	437	194	1
25	47	D/7343-31	T491D476(1)025A(2)	11.8	10.0	0.7	463	417	185	1
25	68	X/7343-43	T491X686(M)025A(2)	17.0	8.0	0.7	486	437	194	1
25	68	D/7343-31	T491D686(M)025A(2)	17.0	10.0	0.7	463	417	185	1
25	100	X/7343-43	T491X107(1)025A(2)	25.0	8.0	0.3	742	668	297	1
35	0.1	A/3216-18	T491A104(1)035A(2)	0.5	4.0	20.0	61	55	24	1
35	0.15	A/3216-18	T491A154(1)035A(2)	0.5	4.0	19.0	63	57	25	1
35	0.22	A/3216-18	T491A224(1)035A(2)	0.5	4.0	18.0	65	59	26	1
35	0.33	A/3216-18	T491A334(1)035A(2)	0.5	4.0	15.0	71	64	28	1
35	0.47	B/3528-21	T491B474(1)035A(2)	0.5	4.0	8.0	103	93	41	1
35	0.47	A/3216-18	T491A474(1)035A(2)	0.5	4.0	12.0	79	71	32	1
35	0.68	B/3528-21	T491B684(1)035A(2)	0.5	4.0	6.5	114	103	46	1
35	0.68	A/3216-18	T491A684(1)035A(2)	0.5	4.0	8.0	97	87	39	1
35	1	B/3528-21	T491B105(1)035A(2)	0.5	4.0	5.0	130	117	52	1
35	1	A/3216-18	T491A105(1)035A(2)	0.5	4.0	7.5	100	90	40	1
35	1.5	A/3216-18	T491A155(1)035A(2)	0.5	6.0	7.0	104	94	42	1
35	1.5	C/6032-28	T491C155(1)035A(2)	0.5	6.0	4.5	156	140	62	1
35	1.5	B/3528-21	T491B155(1)035A(2)	0.5	6.0	5.0	130	117	52	1
35	2.2	C/6032-28	T491C225(1)035A(2)	0.8	6.0	3.5	177	159	71	1
35	2.2	A/3216-18	T491A225(1)035AT	0.8	6.0	4.5	129	116	52	1
35	2.2	B/3528-21	T491B225(1)035A(2)	0.8	6.0	4.0	146	131	58	1
35	3.3	C/6032-28	T491C335(1)035A(2)	1.2	6.0	2.5	210	189	84	1
35	3.3	B/3528-21	T491B335(1)035A(2)	1.2	6.0	3.5	156	140	62	1
35	4.7	D/7343-31	T491D475(1)035A(2)	1.6	6.0	1.5	316	284	126	1
35	4.7	B/3528-21	T491B475(1)035AT	1.6	6.0	3.1	166	149	66	1
35	4.7	C/6032-28	T491C475(1)035A(2)	1.6	6.0	2.2	224	202	90	1
35	6.8	D/7343-31	T491D685(1)035A(2)	2.4	6.0	1.3	340	306	136	1
35	6.8	V/7343-20	T491V685(1)035AT	2.4	6.0	1.2	323	291	129	1
35	6.8	C/6032-28	T491C685(1)035A(2)	2.4	6.0	1.8	247	222	99	1
35	10	D/7343-31	T491D106(1)035A(2)	3.5	6.0	1.0	387	348	155	1
35	10	C/6032-28	T491C106(M)035A(2)	3.5	6.0	1.6	262	236	105	1
35	10	V/7343-20	T491V106(1)035A(2)	3.5	6.0	2.0	250	225	100	1
35	15	X/7343-43	T491X156(1)035A(2)	5.3	6.0	0.9	428	385	171	1
35	15	D/7343-31	T491D156(1)035A(2)	5.3	6.0	0.8	433	390	173	1
35	22	X/7343-43	T491X226(1)035A(2)	7.7	6.0	0.7	486	437	194	1
35	22	D/7343-31	T491D226(1)035A(2)	7.7	6.0	0.7	463	417	185	1
35	33	X/7343-43	T491X336(1)035A(2)	11.6	6.0	0.6	524	472	210	1
35	47	X/7343-43	T491X476(1)035A(2)	16.5	8.0	0.6	524	472	210	1
35	47	E/7360-38	T491E476(1)035A(2)	16.5	10.0	0.5	632	569	253	1
50	0.1	A/3216-18	T491A104(1)050A(2)	0.5	4.0	20.0	61	55	24	1
50	0.15	B/3528-21	T491B154(1)050A(2)	0.5	4.0	16.0	73	66	29	1
50	0.15	A/3216-18	T491A154(1)050A(2)	0.5	4.0	15.0	71	64	28	1
50	0.22	B/3528-21	T491B224(1)050A(2)	0.5	4.0	14.0	78	70	31	1
50	0.22	A/3216-18	T491A224(1)050AT	0.5	4.0	18.0	65	59	26	1
VDC	µF	KEMET/EIA	(See below for part options)	µA @ +20°C Maximum/ 5 Minutes	% @ +20°C 120 Hz Maximum	Ω @ +20°C 100 kHz Maximum	(mA) 100 kHz 25°C	(mA) 100 kHz +85°C	(mA) 100 kHz +125°C	Reflow Temperature ≤ 260 °C
Rated Voltage	Rated Cap	Case Code/ Case Size	KEMET Part Number	DC Leakage	DF	ESR	Maximum Allowable Ripple Current			Moisture Sensitivity

(1) To complete KEMET part number, insert M for ±20% or K for ±10%. Designates capacitance tolerance.
(2) To complete KEMET part number, insert T = 100% Matte Tin (Sn) Plated, G = Gold Plated, H = Standard Solder coated (SnPb 5% Pb minimum), N = Non-Magnetic 100% Tin (Sn), M = Non-Magnetic (SnPb). Designates Termination Finish.
Refer to Ordering Information for additional detail.
Higher voltage ratings and tighter tolerance product including ESR may be substituted within the same size at KEMET's option. Voltage substitution will be marked with the higher voltage rating. Substitutions can include better than series.

Roll Over for Order Info.

Table 1 – Ratings & Part Number Reference cont'd

Rated Voltage	Rated Cap	Case Code/ Case Size	KEMET Part Number	DC Leakage	DF	ESR	Maximum Allowable Ripple Current			Moisture Sensitivity
VDC	µF	KEMET/EIA	(See below for part options)	µA @ +20ºC Maximum/ 5 Minutes	% @ +20ºC 120 Hz Maximum	Ω @ +20ºC 100 kHz Maximum	(mA) 100 kHz 25ºC	(mA) 100 kHz +85ºC	(mA) 100 kHz +125ºC	Reflow Temperature ≤ 260 ºC
50	0.33	A/3216-18	T491A334(1)050A(2)	0.5	4.0	14.0	73	66	29	1
50	0.33	B/3528-21	T491B334(1)050A(2)	0.5	4.0	10.0	92	83	37	1
50	0.47	A/3216-18	T491A474(1)050A(2)	0.5	4.0	9.5	280	253	112	1
50	0.47	C/6032-28	T491C474(1)050A(2)	0.5	4.0	8.0	117	105	47	1
50	0.47	B/3528-21	T491B474(1)050A(2)	0.5	4.0	9.0	97	87	39	1
50	0.68	A/3216-18	T491A684(1)050A(2)	0.5	4.0	8.0	97	87	39	1
50	0.68	C/6032-28	T491C684(1)050A(2)	0.5	4.0	7.0	125	113	50	1
50	0.68	B/3528-21	T491B684(1)050A(2)	0.5	4.0	8.0	103	93	41	1
50	1	A/3216-18	T491A105(1)050A(2)	0.5	4.0	7.0	104	94	42	1
50	1	C/6032-28	T491C105(1)050A(2)	0.5	4.0	5.5	141	127	56	1
50	1	B/3528-21	T491B105(1)050A(2)	0.5	6.0	6.0	119	107	48	1
50	1	V/7343-20	T491V105(1)050A(2)	0.5	4.0	6.0	144	130	58	1
50	1.5	D/7343-31	T491D155(1)050A(2)	0.8	6.0	3.5	207	186	83	1
50	1.5	C/6032-28	T491C155(1)050A(2)	0.8	6.0	4.5	156	140	62	1
50	2.2	D/7343-31	T491D225(1)050A(2)	1.1	6.0	2.5	245	221	98	1
50	2.2	C/6032-28	T491C225(1)050A(2)	1.1	6.0	3.0	191	172	76	1
50	3.3	C/6032-28	T491C335(1)050AT	1.7	6.0	2.5	210	189	84	1
50	3.3	D/7343-31	T491D335(1)050A(2)	1.7	6.0	2.0	274	247	110	1
50	4.7	D/7343-31	T491D475(1)050A(2)	2.4	6.0	1.4	327	294	131	1
50	6.8	X/7343-43	T491X685(1)050A(2)	3.4	6.0	1.0	406	365	162	1
50	6.8	D/7343-31	T491D685(1)050A(2)	3.4	6.0	1.0	387	348	155	1
50	10	X/7343-43	T491X106(1)050A(2)	5.0	6.0	0.7	486	437	194	1
50	10	D/7343-31	T491D106(1)050A(2)	5.0	6.0	0.8	433	390	173	1
50	15	X/7343-43	T491X156(1)050A(2)	7.5	8.0	0.7	486	437	194	1
50	22	X/7343-43	T491X226(1)050A(2)	11.0	10.0	0.6	524	472	210	1
VDC	µF	KEMET/EIA	(See below for part options)	µA @ +20ºC Maximum/ 5 Minutes	% @ +20ºC 120 Hz Maximum	Ω @ +20ºC 100 kHz Maximum	(mA) 100 kHz 25ºC	(mA) 100 kHz +85ºC	(mA) 100 kHz +125ºC	Reflow Temperature ≤ 260 ºC
Rated Voltage	Rated Cap	Case Code/ Case Size	KEMET Part Number	DC Leakage	DF	ESR	Maximum Allowable Ripple Current			Moisture Sensitivity

(1) To complete KEMET part number, insert M for ±20% or K for ±10%. Designates capacitance tolerance.
(2) To complete KEMET part number, insert T = 100% Matte Tin (Sn) Plated, G = Gold Plated, H = Standard Solder coated (SnPb 5% Pb minimum), N = Non-Magnetic 100% Tin (Sn), M = Non-Magnetic (SnPb). Designates Termination Finish.
Refer to Ordering Information for additional detail.
Higher voltage ratings and tighter tolerance product including ESR may be substituted within the same size at KEMET's option. Voltage substitution will be marked with the higher voltage rating. Substitutions can include better than series.

Roll Over for Order Info.

Recommended Voltage Derating Guidelines

	-55°C to 85°C	85°C to 125°C
% Change in Working DC Voltage with Temperature	V_R	67% of V_R
Recommended Maximum Application Voltage	50% of V_R	33% of V_R

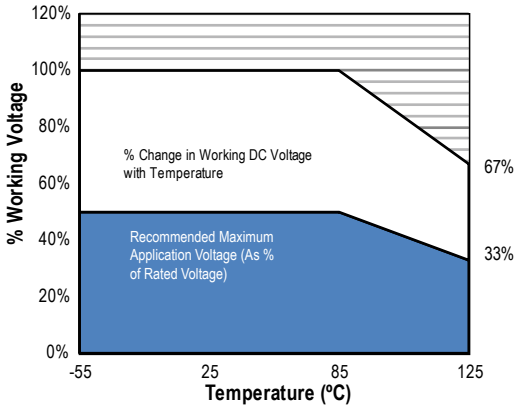

Ripple Current/Ripple Voltage

KEMET Series and Case Code	EIA Case Code	Maximum Power Dissipation (P max) mWatts @ 25°C w/+20°C Rise
A	3216–18	75
B	3528–21	85
C	6032–28	110
D	7343–31	150
X	7343–43	165
E	7360–38	200
T428P	7360–38	325
S	3216–12	60
T	3528–12	70
U	6032–15	90
V	7343–20	125
T510X	7343–43	270
T510E	7360–38	285

Temperature Compensation Multipliers for Maximum Power Dissipation		
≤ 25°C	85°C	125°C
1.00	0.90	0.40

T= Environmental Temperature

Using the P max of the device, the maximum allowable rms ripple current or voltage may be determined.

$I(max) = \sqrt{P\ max/R}$
$E(max) = \sqrt{P\ max*R}$

I = rms ripple current (amperes)
E = rms ripple voltage (volts)
Pmax = maximum power dissipation (watts)
R = ESR at specified frequency (ohms)

Reverse Voltage

Solid tantalum capacitors are polar devices and may be permanently damaged or destroyed if connected with the wrong polarity. The positive terminal is identified on the capacitor body by a stripe plus in some cases a beveled edge. A small degree of transient reverse voltage is permissible for short periods per the table. The capacitors should not be operated continuously in reverse mode, even within these limits.

Temperature	Permissible Transient Reverse Voltage
25°C	15% of Rated Voltage
85°C	5% of Rated Voltage
125°C	1% of Rated Voltage

Table 2 – Land Dimensions/Courtyard

KEMET	Metric Size Code	Density Level A: Maximum (Most) Land Protrusion (mm)					Density Level B: Median (Nominal) Land Protrusion (mm)					Density Level C: Minimum (Least) Land Protrusion (mm)				
Case	EIA	W	L	S	V1	V2	W	L	S	V1	V2	W	L	S	V1	V2
A	3216–18	1.35	2.20	0.62	6.02	2.80	1.23	1.80	0.82	4.92	2.30	1.13	1.42	0.98	4.06	2.04
B	3528–21	2.35	2.21	0.92	6.32	4.00	2.23	1.81	1.12	5.22	3.50	2.13	1.43	1.28	4.36	3.24
C	6032–25	2.35	2.77	2.37	8.92	4.50	2.24	2.37	2.57	7.82	4.00	2.14	1.99	2.73	6.96	3.74
D	7343–31	2.55	2.77	3.67	10.22	5.60	2.43	2.37	3.87	9.12	5.10	2.33	1.99	4.03	8.26	4.84
L	6032-19	2.35	2.77	2.37	8.92	4.50	2.23	2.37	2.57	7.82	4.00	2.13	1.99	2.73	6.96	3.74
M	3528-15	2.35	2.20	0.92	6.32	4.00	2.23	1.80	1.12	5.22	3.50	2.13	1.42	1.28	4.36	3.24
H	7360-20	4.25	2.77	3.67	10.22	7.30	4.13	2.37	3.87	9.12	6.80	4.03	1.99	4.03	8.26	6.54
E[1]	7360–38	4.25	2.77	3.67	10.22	7.30	4.13	2.37	3.87	9.12	6.80	4.03	1.99	4.03	8.26	6.54
Q	7343-12	2.55	2.77	3.67	10.22	5.60	2.43	2.37	3.87	9.12	5.10	2.33	1.99	4.03	8.26	4.84
R[2]	2012-12	1.05	1.05	0.15	4.82	2.50	0.93	1.50	0.22	3.72	2.00	0.83	1.12	0.38	2.86	1.74
S[2]	3216–12	1.35	2.20	0.62	6.02	2.80	1.23	1.80	0.82	4.92	2.30	1.13	1.42	0.98	4.06	2.04
T	3528–12	2.35	2.21	0.92	6.32	4.00	2.23	1.81	1.12	5.22	3.50	2.13	1.43	1.25	4.36	3.24
U	6032–15	2.35	2.77	2.37	8.92	4.50	2.24	2.37	2.57	7.82	4.00	2.14	1.99	2.73	6.96	3.74
V	7343–20	2.55	2.77	3.67	10.22	5.60	2.43	2.37	3.87	9.12	5.10	2.33	1.99	4.03	8.26	4.84
W	7343–15	2.55	2.77	3.67	10.22	5.60	2.43	2.37	3.87	9.12	5.10	2.33	1.99	4.03	8.26	4.84
X[1]	7343–43	2.55	2.77	3.67	10.22	5.60	2.43	2.37	3.87	9.12	5.10	2.33	1.99	4.03	8.26	4.84
Y[1]	7343–40	2.55	2.78	3.67	10.22	5.60	2.43	2.37	3.87	9.12	5.10	2.33	1.99	4.03	8.26	4.84

Density Level A: *For low-density product applications. Recommended for wave solder applications and provides a wider process window for reflow solder processes.*

Density Level B: *For products with a moderate level of component density. Provides a robust solder attachment condition for reflow solder processes.*

Density Level C: *For high component desity product applications. Before adapting the minimum land pattern variations the user should perform qualification testing based on the conditions outlined in IPC standard 7351 (IPC–7351).*

[1] Height of these chips may create problems in wave soldering.

[2] Land pattern geometry is too small for silkscreen outline.

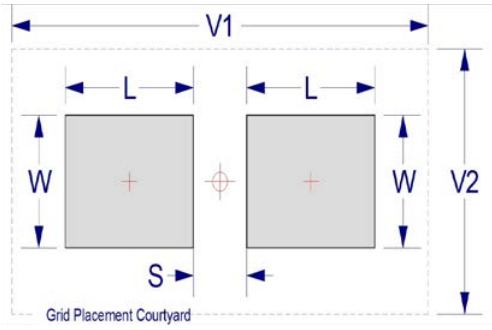

Soldering Process

KEMET's families of surface mount capacitors are compatible with wave (single or dual), convection, IR, or vapor phase reflow techniques. Preheating of these components is recommended to avoid extreme thermal stress. KEMET's recommended profile conditions for convection and IR reflow reflect the profile conditions of the IPC/J–STD–020D standard for moisture sensitivity testing. The devices can safely withstand a maximum of three reflow passes at these conditions.

Note that although the X/7343–43 case size can withstand wave soldering, the tall profile (4.3 mm maximum) dictates care in wave process development.

Hand soldering should be performed with care due to the difficulty in process control. If performed, care should be taken to avoid contact of the soldering iron to the molded case. The iron should be used to heat the solder pad, applying solder between the pad and the termination, until reflow occurs. Once reflow occurs, the iron should be removed immediately. "Wiping" the edges of a chip and heating the top surface is not recommended.

During typical reflow operations, a slight darkening of the gold-colored epoxy may be observed. This slight darkening is normal and not harmful to the product. Marking permanency is not affected by this change.

Profile Feature	SnPb Assembly	Pb-Free Assembly
Preheat/Soak		
Temperature Minimum (T_{Smin})	100°C	150°C
Temperature Maximum (T_{Smax})	150°C	200°C
Time (t_s) from T_{smin} to T_{smax})	60 – 120 seconds	60 – 120 seconds
Ramp-up Rate (T_L to T_P)	3°C/seconds maximum	3°C/seconds maximum
Liquidous Temperature (T_L)	183°C	217°C
Time Above Liquidous (t_L)	60 – 150 seconds	60 – 150 seconds
Peak Temperature (T_P)	220°C* 235°C**	250°C* 260°C**
Time within 5°C of Maximum Peak Temperature (t_P)	20 seconds maximum	30 seconds maximum
Ramp-down Rate (T_P to T_L)	6°C/seconds maximum	6°C/seconds maximum
Time 25°C to Peak Temperature	6 minutes maximum	8 minutes maximum

Note: All temperatures refer to the center of the package, measured on the package body surface that is facing up during assembly reflow.
**Case Size D, E, P, Y, and X*
***Case Size A, B, C, H, I, K, M, R, S, T, U, V, W, and Z*

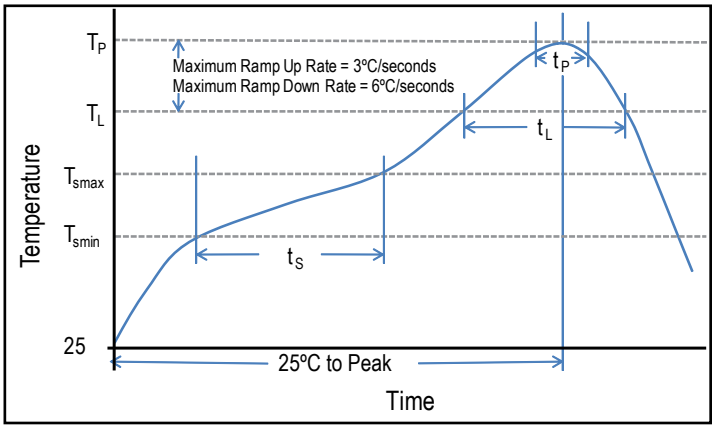

Construction

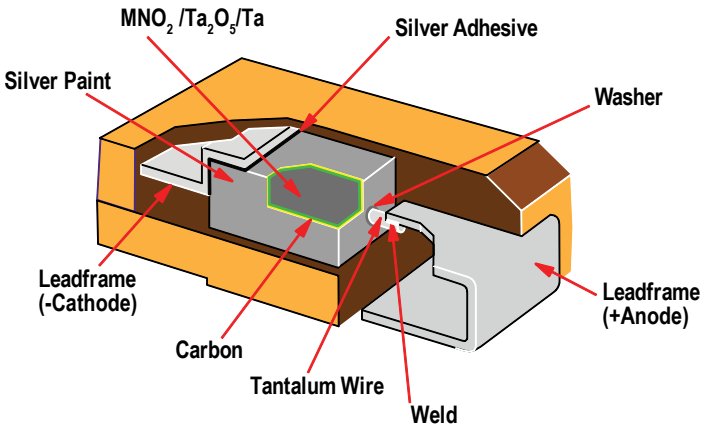

Capacitor Marking

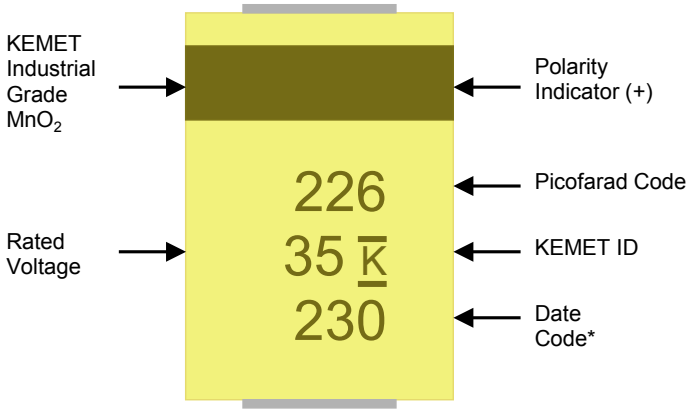

C, D, X Case Sizes

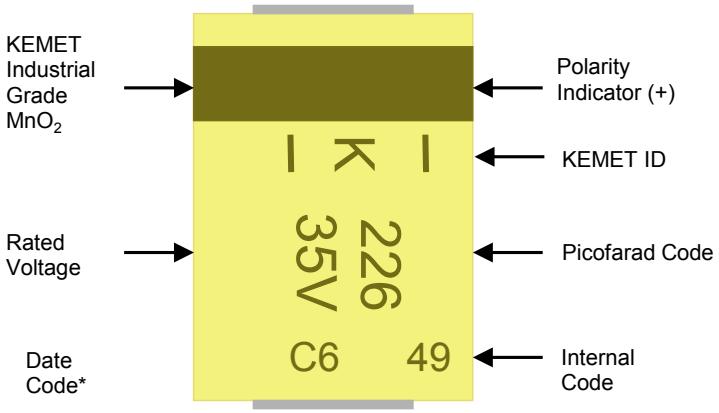

* 230 = 30th week of 2012

Date Code *	
1st digit = Last number of Year	9 = 2009 0 = 2010 1 = 2011 2 = 2012 3 = 2013 4 = 2014
2nd and 3rd digit = Week of the Year	01 = 1st week of the Year to 52 = 52nd week of the Year

Date Code*		
Year	Month	
X = 2009	1 = Jan	7 = Jul
A = 2010	2 = Feb	8 = Aug
B = 2011	3 = Mar	9 = Sept
C = 2012	4 = Apr	O = Oct
D = 2013	5 = May	N = Nov
E = 2014	6 = Jun	D = Dec

Storage

Tantalum chip capacitors should be stored in normal working environments. While the chips themselves are quite robust in other environments, solderability will be degraded by exposure to high temperatures, high humidity, corrosive atmospheres, and long term storage. In addition, packaging materials will be degraded by high temperature– reels may soften or warp and tape peel force may increase. KEMET recommends that maximum storage temperature not exceed 40ºC and maximum storage humidity not exceed 60% relative humidity. Temperature fluctuations should be minimized to avoid condensation on the parts and atmospheres should be free of chlorine and sulphur bearing compounds. For optimized solderability chip stock should be used promptly, preferably within three years of receipt.

Tape & Reel Packaging Information

KEMET's molded tantalum and aluminum chip capacitor families are packaged in 8 and 12 mm plastic tape on 7" and 13" reels in accordance with *EIA Standard 481–1*: Embossed Carrier Taping of Surface Mount Components for Automatic Handling. This packaging system is compatible with all tape-fed automatic pick-and-place systems.

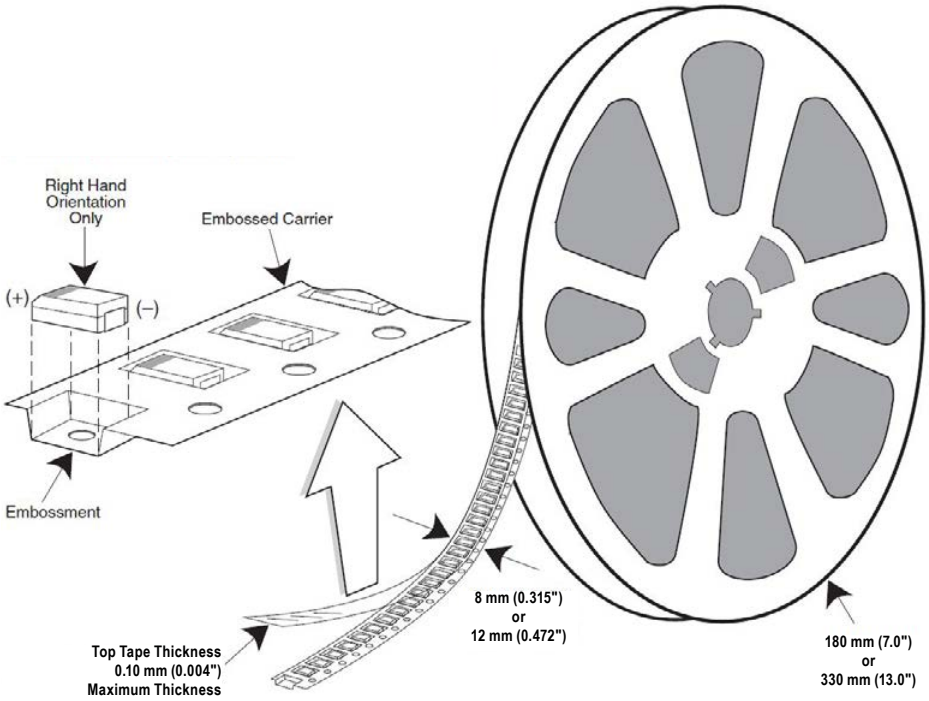

Table 3 – Packaging Quantity

Case Code		Tape Width (mm)	7" Reel*	13" Reel*
KEMET	EIA			
I	3216-10	8	3,000	12,000
S	3216-12	8	2,500	10,000
T	3528-12	8	2,500	10,000
M	3528-15	8	2,000	8,000
U	6032-15	12	1,000	5,000
L	6032-19	12	1,000	5,000
W	7343-15	12	1,000	3,000
Z	7343-17	12	1,000	3,000
V	7343-20	12	1,000	3,000
A	3216-18	8	2,000	9,000
B	3528-21	8	2,000	8,000
C	6032-28	12	500	3,000
D	7343-31	12	500	2,500
Y	7343-40	12	500	2,000
X	7343-43	12	500	2,000
E/T428P	7360-38	12	500	2,000
H	7360-20	12	1,000	2,500

** No C-Spec required for 7" reel packaging. C-7280 required for 13" reel packaging.*

Figure 1 – Embossed (Plastic) Carrier Tape Dimensions

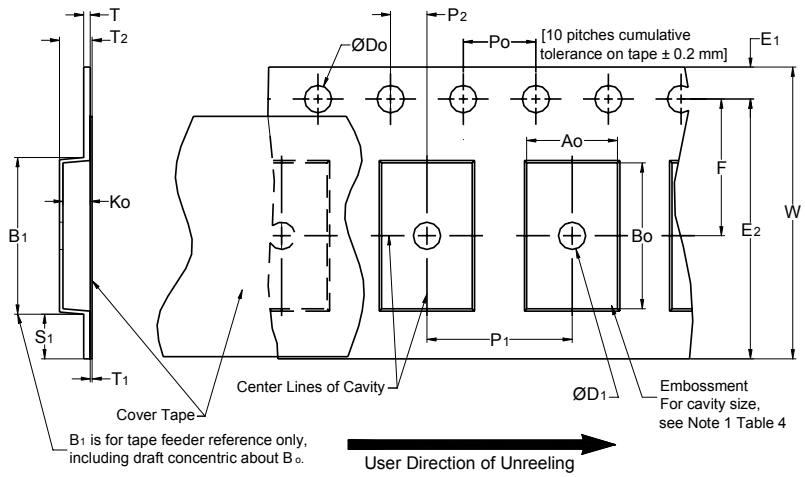

Table 4 – Embossed (Plastic) Carrier Tape Dimensions

Metric will govern

Constant Dimensions — Millimeters (Inches)									
Tape Size	D_0	D_1 Minimum Note 1	E_1	P_0	P_2	R Reference Note 2	S_1 Minimum Note 3	T Maximum	T_1 Maximum
8 mm	1.5 +0.10/-0.0 (0.059 +0.004/-0.0)	1.0 (0.039)	1.75 ±0.10 (0.069 ±0.004)	4.0 ±0.10 (0.157 ±0.004)	2.0 ±0.05 (0.079 ±0.002)	25.0 (0.984)	0.600 (0.024)	0.600 (0.024)	0.100 (0.004)
12 mm		1.5 (0.059)				30 (1.181)			
16 mm									

Variable Dimensions — Millimeters (Inches)								
Tape Size	Pitch	B_1 Maximum Note 4	E_2 Minimum	F	P_1	T_2 Maximum	W Maximum	A_0,B_0 & K_0
8 mm	Single (4 mm)	4.35 (0.171)	6.25 (0.246)	3.5 ±0.05 (0.138 ±0.002)	4.0 ±0.10 (0.157 ±0.004)	2.5 (0.098)	8.3 (0.327)	Note 5
12 mm	Single (4 mm) & Double (8 mm)	8.2 (0.323)	10.25 (0.404)	5.5 ±0.05 (0.217 ±0.002)	8.0 ±0.10 (0.315 ±0.004)	4.6 (0.181)	12.3 (0.484)	
16 mm	Triple (12 mm)	12.1 (0.476)	14.25 (0.561)	5.5 ±0.05 (0.217 ±0.002)	8.0 ±0.10 (0.315 ±0.004)	4.6 (0.181)	16.3 (0.642)	

1. The embossment hole location shall be measured from the sprocket hole controlling the location of the embossment. Dimensions of embossment location and hole location shall be applied independent of each other.

2. The tape, with or without components, shall pass around R without damage (see Figure 5).

3. If S_1 < 1.0 mm, there may not be enough area for cover tape to be properly applied (see EIA Standard 481–D, paragraph 4.3, section b).

4. B_1 dimension is a reference dimension for tape feeder clearance only.

5. The cavity defined by A_0, B_0 and K_0 shall surround the component with sufficient clearance that:

(a) the component does not protrude above the top surface of the carrier tape.

(b) the component can be removed from the cavity in a vertical direction without mechanical restriction, after the top cover tape has been removed.

(c) rotation of the component is limited to 20° maximum for 8 and 12 mm tapes and 10° maximum for 16 mm tapes (see Figure 2).

(d) lateral movement of the component is restricted to 0.5 mm maximum for 8 mm and 12 mm wide tape and to 1.0 mm maximum for 16 mm tape (see Figure 3).

(e) see Addendum in EIA Standard 481–D for standards relating to more precise taping requirements.

Packaging Information Performance Notes

1. Cover Tape Break Force: 1.0 Kg minimum.
2. Cover Tape Peel Strength: The total peel strength of the cover tape from the carrier tape shall be:

Tape Width	Peel Strength
8 mm	0.1 to 1.0 Newton (10 to 100 gf)
12 and 16 mm	0.1 to 1.3 Newton (10 to 130 gf)

The direction of the pull shall be opposite the direction of the carrier tape travel. The pull angle of the carrier tape shall be 165° to 180° from the plane of the carrier tape. During peeling, the carrier and/or cover tape shall be pulled at a velocity of 300 ±10 mm/minute.
3. Labeling: Bar code labeling (standard or custom) shall be on the side of the reel opposite the sprocket holes. *Refer to EIA Standards 556 and 624*.

Figure 2 – Maximum Component Rotation

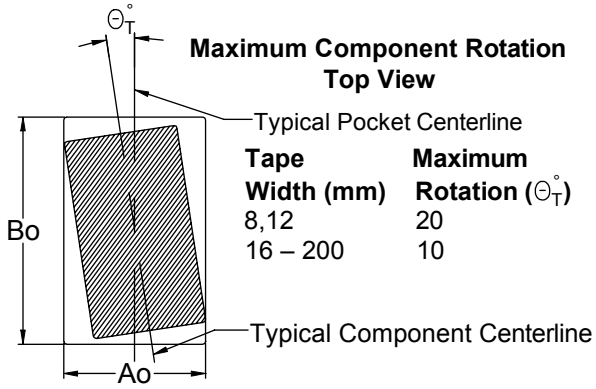

Tape Width (mm)	Maximum Rotation (Θ_T°)
8,12	20
16 – 200	10

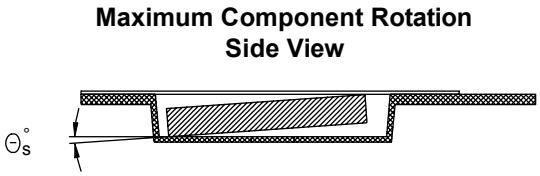

Tape Width (mm)	Maximum Rotation (Θ_S°)
8,12	20
16 – 56	10
72 – 200	5

Figure 3 – Maximum Lateral Movement

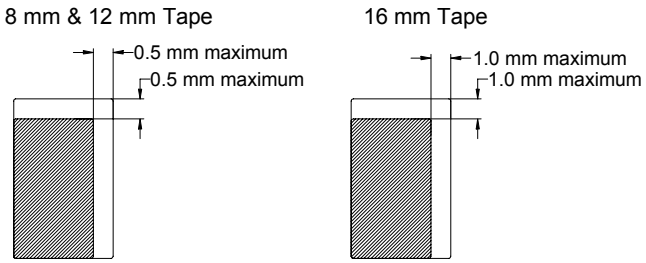

Figure 4 – Bending Radius

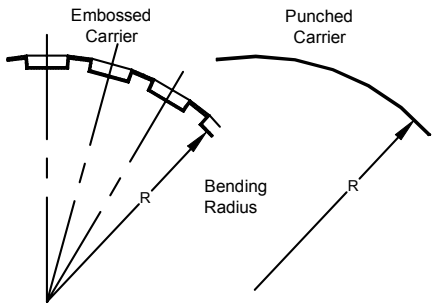

Figure 5 – Reel Dimensions

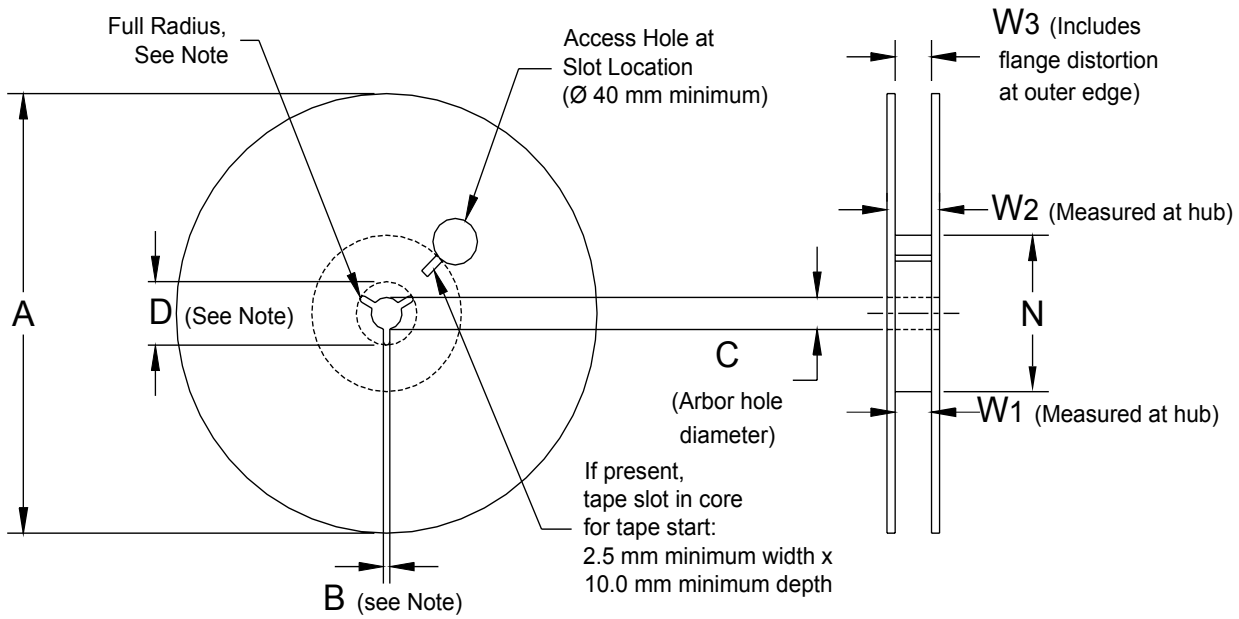

Note: Drive spokes optional; if used, dimensions B and D shall apply.

Table 5 – Reel Dimensions

Metric will govern

Constant Dimensions — Millimeters (Inches)				
Tape Size	A	B Minimum	C	D Minimum
8 mm	178 ±0.20 (7.008 ±0.008) or 330 ±0.20 (13.000 ±0.008)	1.5 (0.059)	13.0 +0.5/-0.2 (0.521 +0.02/-0.008)	20.2 (0.795)
12 mm				
16 mm				

Variable Dimensions — Millimeters (Inches)				
Tape Size	N Minimum	W_1	W_2 Maximum	W_3
8 mm	50 (1.969)	8.4 +1.5/-0.0 (0.331 +0.059/-0.0)	14.4 (0.567)	Shall accommodate tape width without interference
12 mm		12.4 +2.0/-0.0 (0.488 +0.078/-0.0)	18.4 (0.724)	
16 mm		16.4 +2.0/-0.0 (0.646 +0.078/-0.0)	22.4 (0.882)	

Figure 6 – Tape Leader & Trailer Dimensions

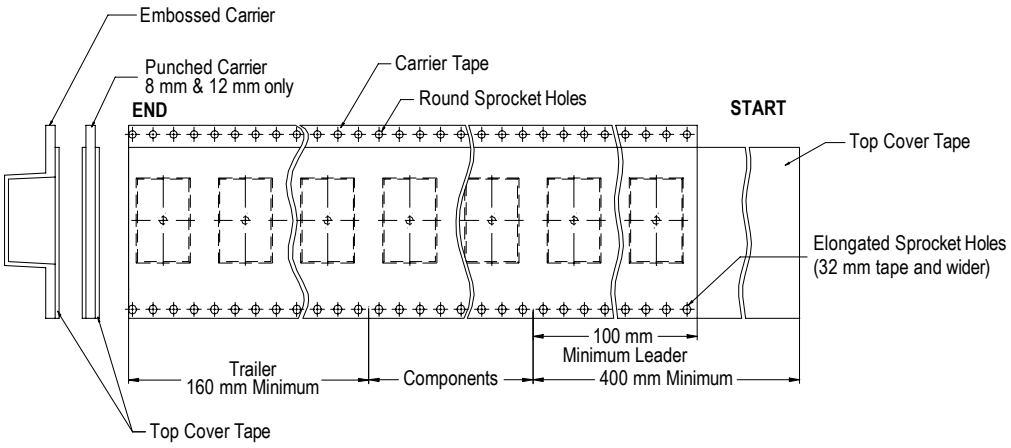

Figure 7 – Maximum Camber

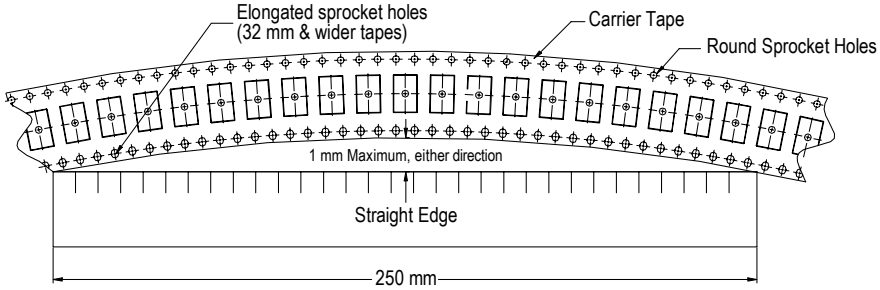

KEMET Corporation World Headquarters

2835 KEMET Way
Simpsonville, SC 29681

Mailing Address:
P.O. Box 5928
Greenville, SC 29606

www.kemet.com
Tel: 864-963-6300
Fax: 864-963-6521

Corporate Offices
Fort Lauderdale, FL
Tel: 954-766-2800

North America

Southeast
Lake Mary, FL
Tel: 407-855-8886

Northeast
Wilmington, MA
Tel: 978-658-1663

Central
Novi, MI
Tel: 248-994-1030

West
Milpitas, CA
Tel: 408-433-9950

Mexico
Guadalajara, Jalisco
Tel: 52-33-3123-2141

Europe

Southern Europe
Paris, France
Tel: 33-1-4646-1006

Sasso Marconi, Italy
Tel: 39-051-939111

Central Europe
Landsberg, Germany
Tel: 49-8191-3350800

Kamen, Germany
Tel: 49-2307-438110

Northern Europe
Bishop's Stortford, United Kingdom
Tel: 44-1279-460122

Espoo, Finland
Tel: 358-9-5406-5000

Asia

Northeast Asia
Hong Kong
Tel: 852-2305-1168

Shenzhen, China
Tel: 86-755-2518-1306

Beijing, China
Tel: 86-10-5829-1711

Shanghai, China
Tel: 86-21-6447-0707

Taipei, Taiwan
Tel: 886-2-27528585

Southeast Asia
Singapore
Tel: 65-6586-1900

Penang, Malaysia
Tel: 60-4-6430200

Bangalore, India
Tel: 91-806-53-76817

Note: KEMET reserves the right to modify minor details of internal and external construction at any time in the interest of product improvement. KEMET does not assume any responsibility for infringement that might result from the use of KEMET Capacitors in potential circuit designs. KEMET is a registered trademark of KEMET Electronics Corporation.

Other KEMET Resources

Tools	
Resource	Location
Configure A Part: CapEdge	http://capacitoredge.kemet.com
SPICE & FIT Software	http://www.kemet.com/spice
Search Our FAQs: KnowledgeEdge	http://www.kemet.com/keask
Electrolytic LifeCalculator	http://www.kemet.com:8080/elc

Product Information	
Resource	Location
Products	http://www.kemet.com/products
Technical Resources (Including Soldering Techniques)	http://www.kemet.com/technicalpapers
RoHS Statement	http://www.kemet.com/rohs
Quality Documents	http://www.kemet.com/qualitydocuments

Product Request	
Resource	Location
Sample Request	http://www.kemet.com/sample
Engineering Kit Request	http://www.kemet.com/kits

Contact	
Resource	Location
Website	www.kemet.com
Contact Us	http://www.kemet.com/contact
Investor Relations	http://www.kemet.com/ir
Call Us	1-877-MyKEMET
Twitter	http://twitter.com/kemetcapacitors

Disclaimer

All product specifications, statements, information and data (collectively, the "Information") in this datasheet are subject to change. The customer is responsible for checking and verifying the extent to which the Information contained in this publication is applicable to an order at the time the order is placed.

All Information given herein is believed to be accurate and reliable, but it is presented without guarantee, warranty, or responsibility of any kind, expressed or implied.

Statements of suitability for certain applications are based on KEMET Electronics Corporation's ("KEMET") knowledge of typical operating conditions for such applications, but are not intended to constitute – and KEMET specifically disclaims – any warranty concerning suitability for a specific customer application or use. The Information is intended for use only by customers who have the requisite experience and capability to determine the correct products for their application. Any technical advice inferred from this Information or otherwise provided by KEMET with reference to the use of KEMET's products is given gratis, and KEMET assumes no obligation or liability for the advice given or results obtained.

Although KEMET designs and manufactures its products to the most stringent quality and safety standards, given the current state of the art, isolated component failures may still occur. Accordingly, customer applications which require a high degree of reliability or safety should employ suitable designs or other safeguards (such as installation of protective circuitry or redundancies) in order to ensure that the failure of an electrical component does not result in a risk of personal injury or property damage.

Although all product–related warnings, cautions and notes must be observed, the customer should not assume that all safety measures are indicted or that other measures may not be required.

Digitally signed by Jeannette Calvo
DN: c=US, st=FL, l=Fort Lauderdale, o=KEMET Corp., ou=Marketing Communications, cn=Jeannette Calvo, email=jeannettecalvo@kemet.com
Date: 2013.06.24 11:54:17 -04'00'